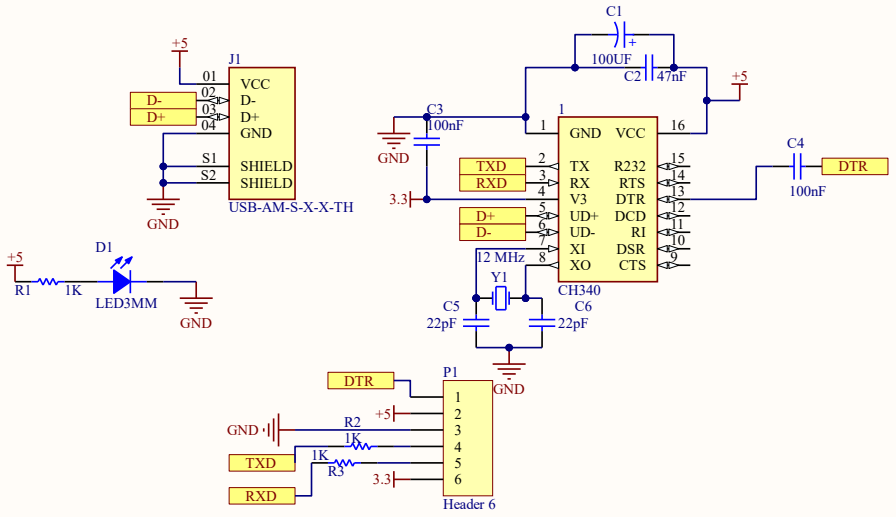

Title		
Size A	Number	Revision
Date: 10/04/2021		Sheet of
File: C:\Users\..\Sheet1.SchDoc		Drawn By: