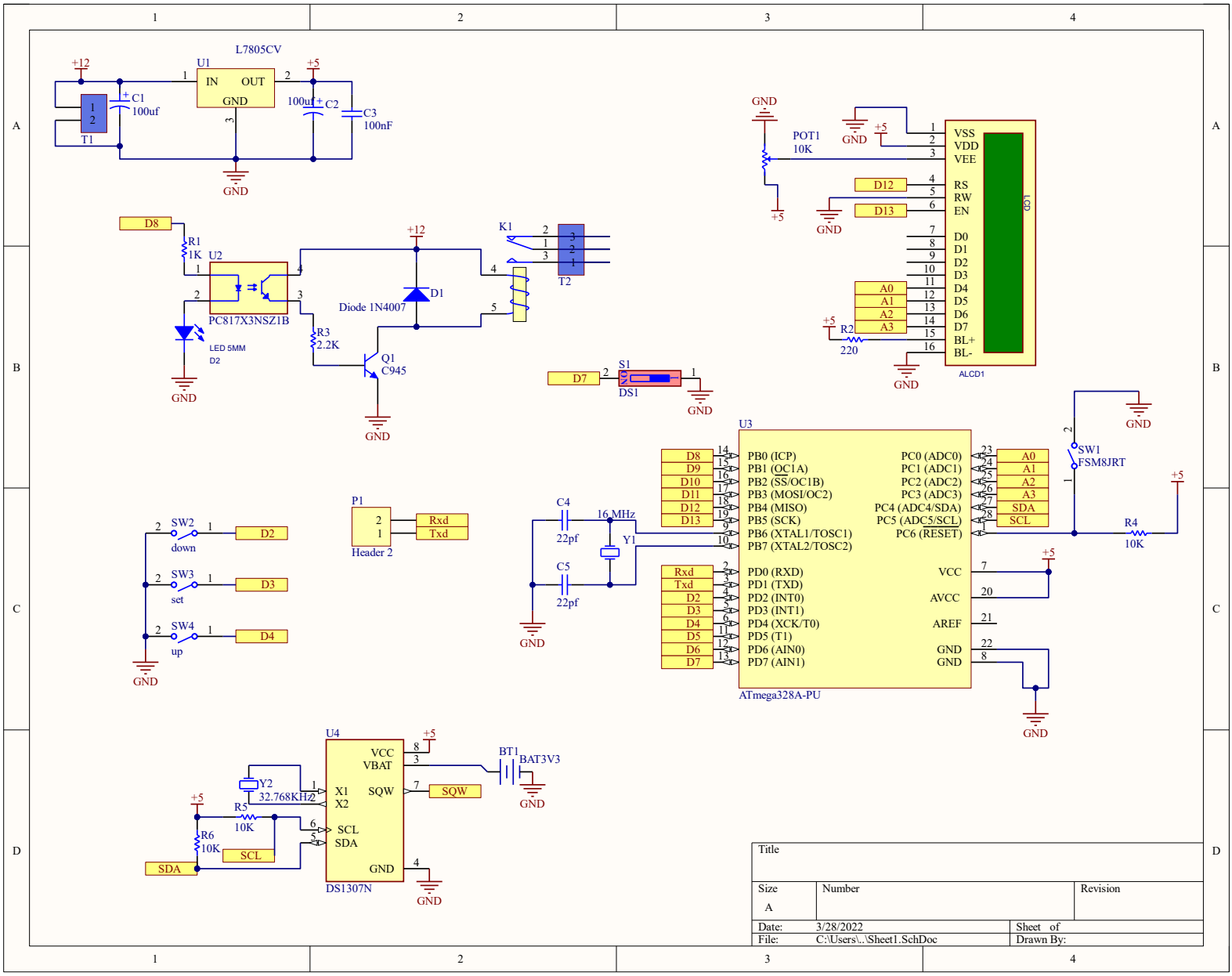
L7805CV
U1
IN
OUT
GND
+12
+5
C1
100uf
C2
100uf
C3
100nF
T1
GND
D8
R1
1K
U2
PC817X3NSZ1B
LED 5MM
D2
R3
2.2K
Diode 1N4007
D1
Q1
C945
K1
T2
POT1
10K
VSS
VDD
VEE
RS
RW
EN
D0
D1
D2
D3
D4
D5
D6
D7
BL+
BL-
LCD
ALCD1
D12
D13
A0
A1
A2
A3
R2
220
D7
S1
DS1
U3
ATmega328A-PU
PB0 (ICP)
PB1 (OC1A)
PB2 (SS/OC1B)
PB3 (MOSI/OC2)
PB4 (MISO)
PB5 (SCK)
PB6 (XTAL1/TOSC1)
PB7 (XTAL2/TOSC2)
PD0 (RXD)
PD1 (TXD)
PD2 (INT0)
PD3 (INT1)
PD4 (XCK/T0)
PD5 (T1)
PD6 (AIN0)
PD7 (AIN1)
PC0 (ADC0)
PC1 (ADC1)
PC2 (ADC2)
PC3 (ADC3)
PC4 (ADC4/SDA)
PC5 (ADC5/SCL)
PC6 (RESET)
VCC
AVCC
AREF
GND
SDA
SCL
SW1
FSM8JRT
R4
10K
C4
22pf
C5
22pf
16 MHz
Y1
P1
Header 2
Rxd
Txd
SW2
down
SW3
set
SW4
up
D2
D3
D4
U4
DS1307N
VCC
VBAT
X1
X2
SQW
SCL
SDA
GND
Y2
32.768KHz
R5
10K
R6
10K
BT1
BAT3V3
Title
Size
A
Number
Revision
Date:
3/28/2022
Sheet of
File:
C:\Users\..\Sheet1.SchDoc
Drawn By: