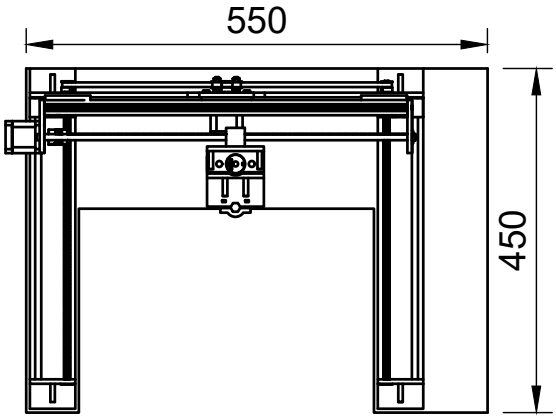

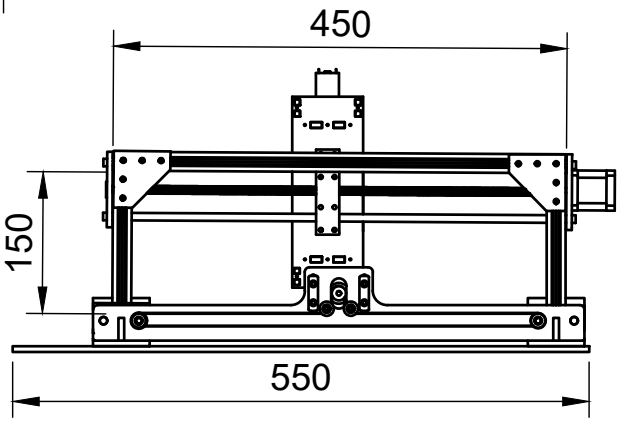

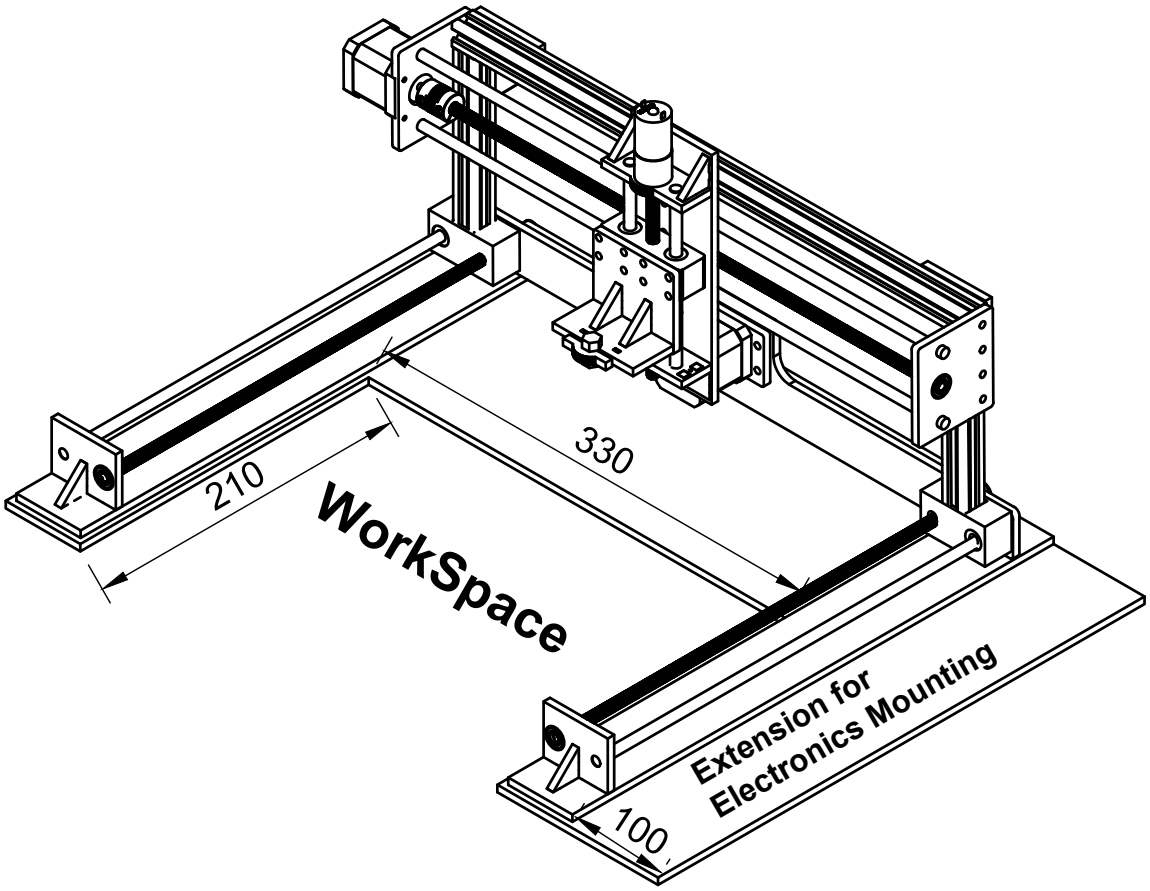

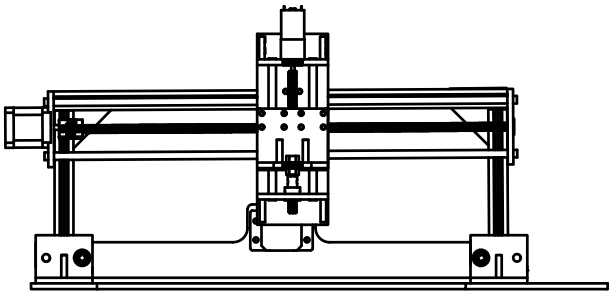

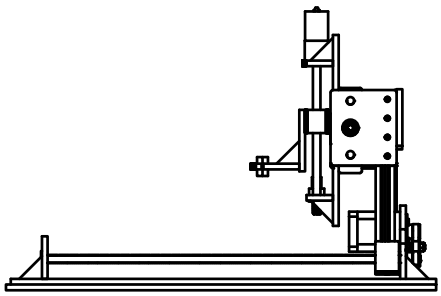

Dept.	Technical reference	Created by TADIWOS, SHEHSIN, AZEEZ 18/01/2026	Approved by
		Document type	Document status
		Title Cartesian ROBOT	DWG No. 01
			Rev. / Date of issue 2026 / Sheet 1/1