MILLING CUTTER

DESCRIPTION

- **Milling cutters** are cutting tools typically used in milling machines or machining centres (and occasionally in other machine tools). They remove material by their movement within the machine (e.g., a ball nose mill) or directly from the cutter's shape (e.g., a form tool such as a hobbing cutter).

GEOMETRY

- A variety of grooves, slots, and pockets in the workpiece may be produced from a variety of tool bits. Common tool bit types are: square end cutters, ball end cutters, t-slot cutters, and shell mills. Square end cutters can mill square slots, pockets, and edges. Ball end cutters mill radiused slots or fillets. T-slot cutters mill exactly that: t-shaped slots. Shell end cutters are used for large flat surfaces and for angle cuts. There are variations of these tool types as well.
- There are four critical angles of each cutting tool: end cutting edge angle, axial relief angle, radial relief angle, and radial rake angle. See graph for common values.

GEOMETRY

- Depending on the material being milled, and what task should be performed, different tool types and geometry may be used. For instance, when milling a material like aluminium, it may be advantageous to use a tool with very deep, polished flutes and a very sharp cutting edge. When machining a tough material such as stainless steel, however, shallow flutes and a squared-off cutting edge will optimize material removal and tool life.

GEOMETRY

- A wide variety of materials are used to produce the cutting tools. Carbide inserts are the most common because they are good for high production milling. High speed steel is commonly used when a special tool shape is needed, not usually used for high production processes. Ceramics inserts are typically used in high speed machining with high production. Diamond inserts are typically used on products that require tight tolerances, typically consisting of high surface qualities (nonferrous or nonmetallic materials). In the early 1990s, use of coatings to reduce wear and friction (among other things) became more common. Most of these coatings are referred to by their chemical composition, such as:

GEOMETRY

- TiN (a basic yellowish coating that has fallen out of wide use)
- TiCN (a popular bluish-grey coating)
- TiAlN and AlTiN (an extremely popular dark purple coating)
- TiAlCrN, AlTiCrN and AlCrTiN (PVD coating).
- PCD veins. Though not a coating some endmills are manufactured with a 'vein' of polycrystaline diamond. The vein is formed in a high temperature-high pressure environment. The vein is formed in a blank and then the material is ground out along the vein to form the cutting edge. The tools can be very costly, however can last many times longer than other tooling.

- Advances in endmill coatings are being made, however, with coatings such as Amorphous Diamond and nanocomposite PVD coatings beginning to be seen at high-end shops (as of 2004).

TYPES OF MILLING CUTTER

1. Arbor Type of Milling Cutter
   a) Plain Milling
   b) Side Milling
   c) Form Milling
   d) Fly Cutter
2. Shank Type of Milling Cutter
   a) End Mill
   b) Inserted Tooth
   c) T-slot
   d) Fly Cutter

Arbor Types of Milling Cutter

- **Arbor milling** is a cutting process which removes material via a multi-toothed cutter. An **arbor mill** is a type of milling machine Characterized by its ability to rapidly remove material from a variety of materials, this milling process is not only rapid but also versatile

Plain Milling

- Once widely used
- Cylinder of high-speed steel with teeth cut on periphery
- Used to produce flat surface
- Several types
  - Light-duty
  - Light-duty helical
  - Heavy-duty
  - High-helix

Side Milling

- Comparatively narrow cylindrical milling cutters with teeth on each side and on periphery
- Used for cutting slots and for face and straddle milling operations
- Free cutting action at high speeds and feeds
- Suited for milling deep, narrow slots

Form Milling

- Incorporate exact shape of part to be produced
- Useful for production of small parts
- Each tooth identical in shape
- Sharpened by grinding tooth face (may have positive, zero or negative rake)
  - Important to maintain original rake
  - Difficult to sharpen

Types of Formed Cutter

Concave

Convex

Gear Tooth

Angular Cutter

- Teeth neither parallel nor perpendicular to cutting axis
- Used for milling angular surfaces
  - Grooves, serrations, chamfers and reamer teeth
- Divided into two groups
  - Single-angle milling cutters
  - Double-angle milling cutters

Angular Cutter

- Single-angle
  - Teeth on angular surface
  - May or may not have teeth on flat
  - 45º or 60º

- Double-angle
  - Two intersecting angular surfaces with cutting teeth on both
  - Equal angles on both side of line at right angle to axis

Fly Cutter

- Single-pointed cutting tool with cutting end ground to desired shape
- Mounted in special adapter or arbor
- Fine feed must be used
- Used in experimental work instead of a specially shaped cutter

Shank Type of Milling Cutter

End Mill

- Cutting teeth on end as well as periphery
- Fitted to spindle by suitable adapter
- Two types
  - Solid end mill: shank and cutter integral
    - Smaller with either straight or helical flutes
    - Two flute or four flute
  - Shell end mill: separate shank

Inserted Tooth

- Only such cutters as are made from a single piece of tool steel have been so far considered. In large cutters, however, the cost of the steel becomes an important item, and there is the ever-present danger of losing a large amount of labor

Inserted Tooth

- Courtesy of Becker Milling Machine Company, Hyde Park, Massachusetts by breakage when hardening. To make an economical, serviceable cutter of large size, it is customary to use a cast-iron body with inserted tool steel teeth. There are several different methods of inserting and holding these teeth. Usually, when the inserted tooth is in the form of a blade, they are held by taper pins or screws, Fig. 211. These blades are renewable, the cast-iron body being used many times.

Inserted Tooth

- Another form of inserted-tooth cutter consists of round, hardened steel pins driven into holes in a cast-iron body. This cutter is also permanent in form, Fig. 212, as broken teeth cannot be replaced; and, when the teeth are worn almost down to the body, the whole cutter is thrown away.

Inserted Tooth

Fig. 211. Cutter with Inserted Teeth.

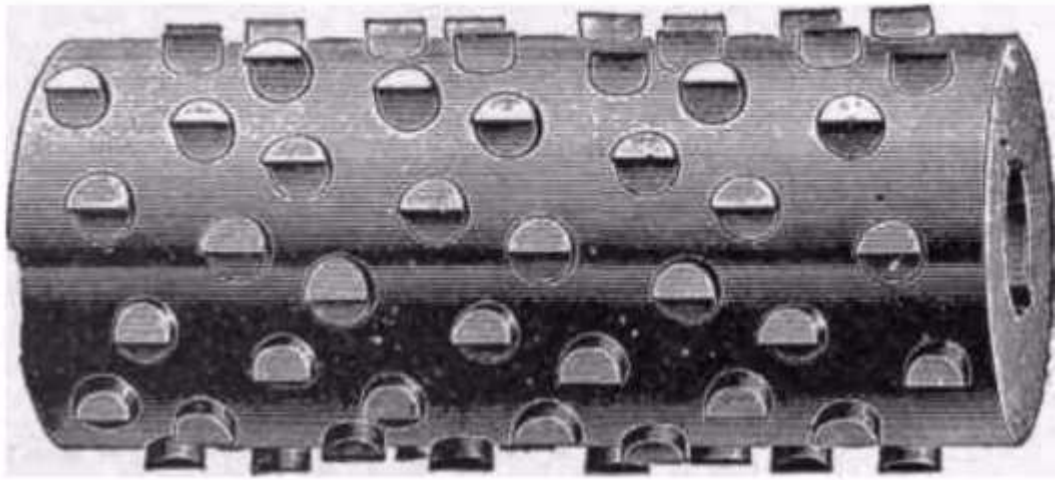

Fig. 212. Form of Inserted-Tooth Cutter Called Slabbing Cutter.

Shell Type (End Mill)

- Face milling cutters under 6 inch
- Solid, multiple-tooth cutters with teeth on face and periphery
- Held on stub arbor
  - May be threaded or use key in shank to drive cutter

(a)

(b)

T-slot

- Used to cut wide horizontal groove at bottom of T-slot
  - After narrow vertical groove machined with end mill or side milling cutter
- Consists of small side milling cutter with teeth on both sides and integral shank for mounting

Fly Cutter

- Single-pointed cutting tool with cutting end ground to desired shape
- Mounted in special adapter or arbor
- Fine feed must be used
- Used in experimental work instead of a specially shaped cutter

PARTS AND THEIR FUNCTIONS

- **Flutes / teeth:** The flutes of the milling bit are the deep helical grooves running up the cutter, while the sharp blade along the edge of the flute is known as the tooth. The tooth cuts the material, and chips of this material are pulled up the flute by the rotation of the cutter. There is almost always one tooth per flute, but some cutters have two teeth per flute.[1] Often, the words *flute* and *tooth* are used interchangeably. Milling cutters may have from one to many teeth, with 2, 3 and 4 being most common. Typically, the more teeth a cutter has, the more rapidly it can remove material. So, a 4-tooth cutter can remove material at twice the rate of a 2-tooth cutter

PARTS AND THEIR FUNCTIONS

- **Helix angle:** The flutes of a milling cutter are almost always helical. If the flutes were straight, the whole tooth would impact the material at once, causing vibration and reducing accuracy and surface quality. Setting the flutes at an angle allows the tooth to enter the material gradually, reducing vibration. Typically, finishing cutters have a higher rake angle (tighter helix) to give a better finish.

PARTS AND THEIR FUNCTIONS

- **Center cutting:** Some milling cutters can drill straight down (plunge) through the material, while others cannot. This is because the teeth of some cutters do not go all the way to the centre of the end face. However, these cutters can cut downwards at an angle of 45 degrees or so.

PARTS AND THEIR FUNCTIONS

- **Shank:** The shank is the cylindrical (non-fluted) part of the tool which is used to hold and locate it in the tool holder. A shank may be perfectly round, and held by friction, or it may have a Weldon Flat, where a grub screw makes contact for increased torque without the tool slipping. The diameter may be different from the diameter of the cutting part of the tool, so that it can be held by a standard tool holder.

MILLING CUTTER CUTTING PRINCIPLE

- **Surface cutting speed (V_c):** This is the speed at which each tooth cuts through the material as the tool spins. This is measured either in metres per minute in metric countries, or surface feet per minute (SFM) in America. Typical values for cutting speed are 10m/min to 60m/min for some steels, and 100m/min and 600m/min for aluminum. This should not be confused with the feed rate.
- **Spindle speed (S):** This is the rotation speed of the tool, and is measured in revolutions per minute (rpm). Typical values are from hundreds of rpm, up to tens of thousands of rpm.

MILLING CUTTER CUTTING PRINCIPLE

- **Diameter of the tool (D):**
- **Feed per tooth (F_z):** This is the distance the material is fed into the cutter as each tooth rotates. This value is the size of the deepest cut the tooth will make.
- **Feed rate (F):** This is the speed at which the material is fed into the cutter. Typical values are from 20mm/min to 5000mm/min.
- **Depth of cut:** This is how deep the tool is under the surface of the material being cut (not shown on the diagram). This will be the height of the chip produced. Typically, the depth of cut will be less than or equal to the diameter of the cutting tool.

MILLING CUTTER CUTTING PRINCIPLE

- The machinist needs three values: **S**, **F** and **Depth** when deciding how to cut a new material with a new tool. However, he will probably be given values of $\mathbf{V_c}$ and $\mathbf{F_z}$ from the tool manufacturer. **S** and **F** can be calculated from them:

Spindle Speed

$$S = \frac{1000V_c}{\pi D}$$

Looking at the formula for the spindle speed, S, it can be seen that larger tools require lower spindle speeds, while small tools may be able to go at high speeds.

Feed rate

$$F = zSF_z$$

The formula for the feed rate, F shows that increasing S or z gives a higher feed rate. Therefore, machinists may choose a tool with the highest number of teeth that can still cope with the swarf load.

MILLING CUTTER CUTTING PRINCIPLE

Conventional milling versus climb milling

- **Conventional milling (left):** The chip thickness starts at zero thickness, and increases up to the maximum. The cut is so light at the beginning that the tool does not cut, but slides across the surface of the material, until sufficient pressure is built up and the tooth suddenly bites and begins to cut. This deforms the material (at point A on the diagram, left), work hardening it, and dulling the tool. The sliding and biting behaviour leaves a poor finish on the material.

MILLING CUTTER CUTTING PRINCIPLE

- **Climb milling (right):** Each tooth engages the material at a definite point, and the width of the cut starts at the maximum and decreases to zero. The chips are disposed behind the cutter, leading to easier swarf removal. The tooth does not rub on the material, and so tool life may be longer. However, climb milling can apply larger loads to the machine, and so is not recommended for older milling machines, or machines which are not in good condition. This type of milling is used predominantly on mills with a backlash eliminator.

MILLING CUTTER CUTTING PRINCIPLE

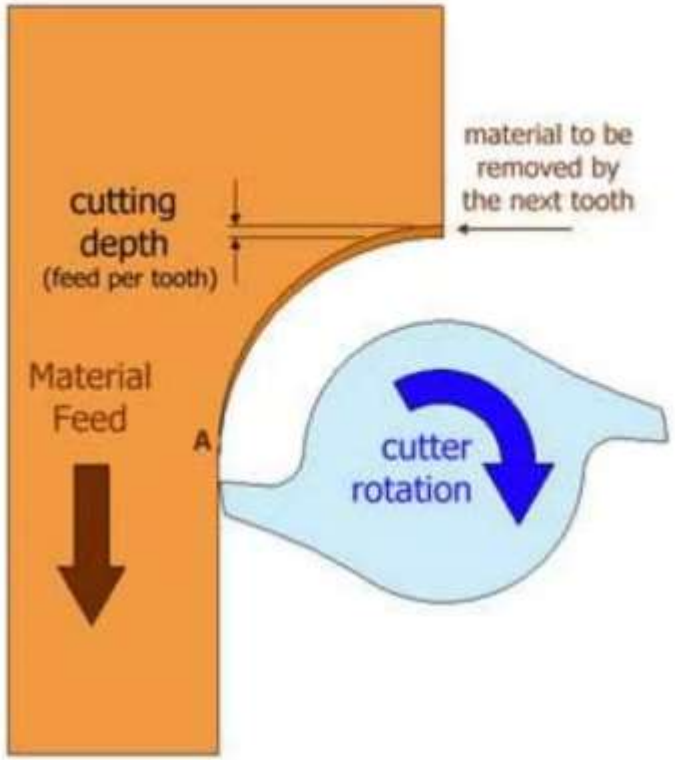

Conventional milling. Point **A** may become work hardened.

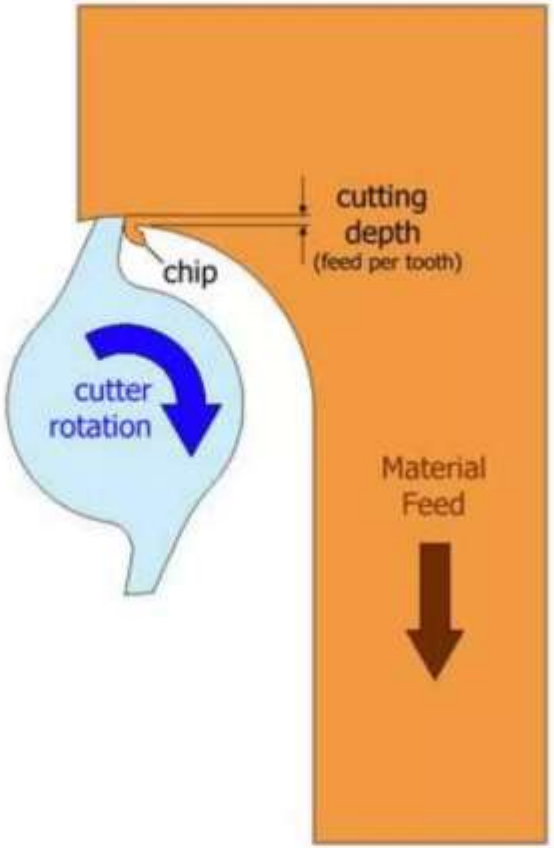

Chip formation during climb milling.

GEOMETRY

BALL END

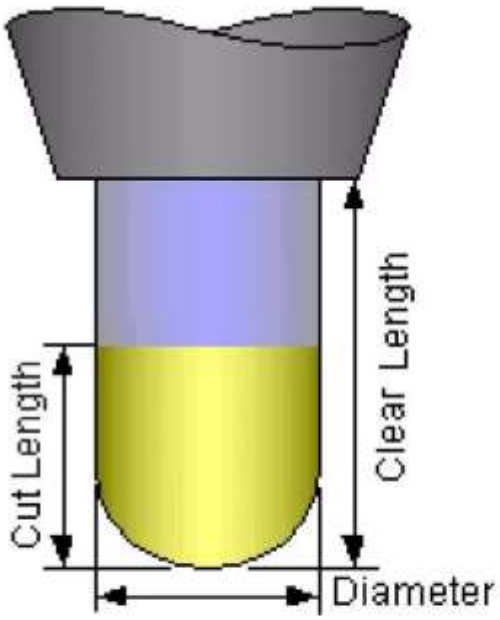

BULL NOSE

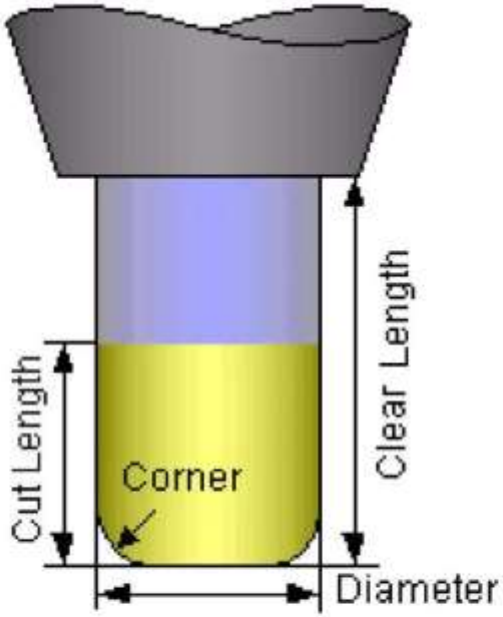

FLAT END

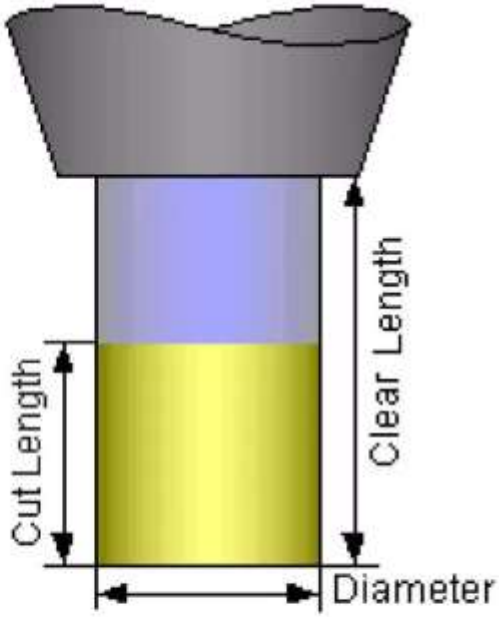

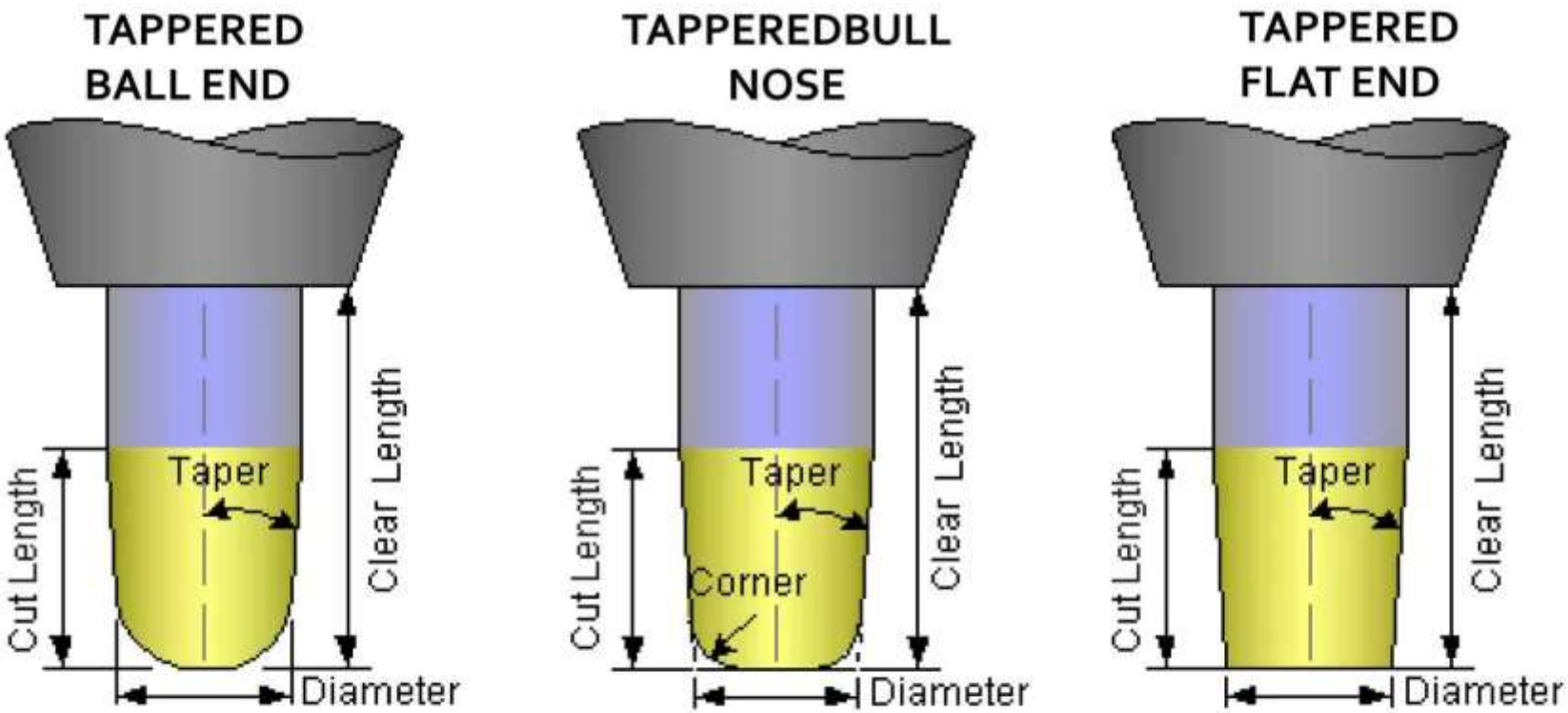
TAPPERED
BALL END
Taper
Cut Length
Clear Length
Diameter
TAPPEREDBULL
NOSE
Taper
Corner
Cut Length
Clear Length
Diameter
TAPPERED
FLAT END
Taper
Cut Length
Clear Length
Diameter

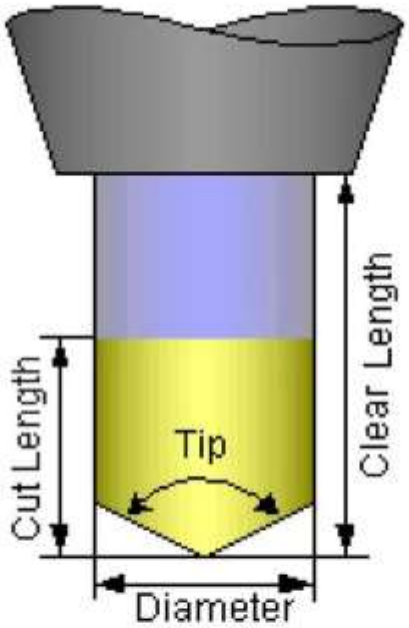
Cut Length
Tip
Clear Length
Diameter

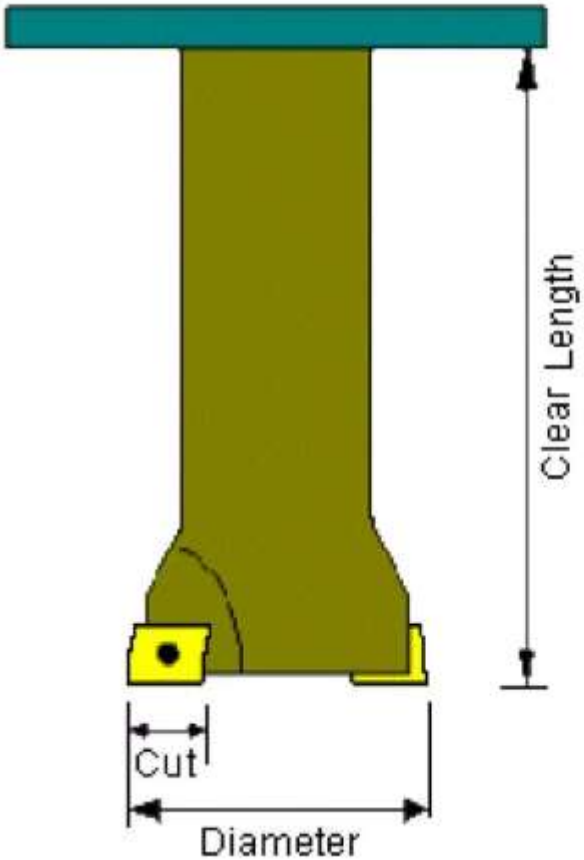
Clear Length
Cut
Diameter

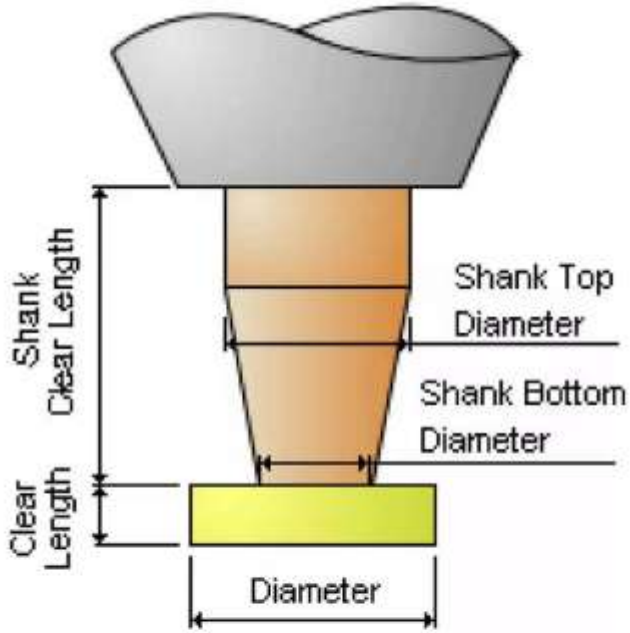
Shank
Clear Length
Shank Top
Diameter
Shank Bottom
Diameter
Clear
Length
Diameter

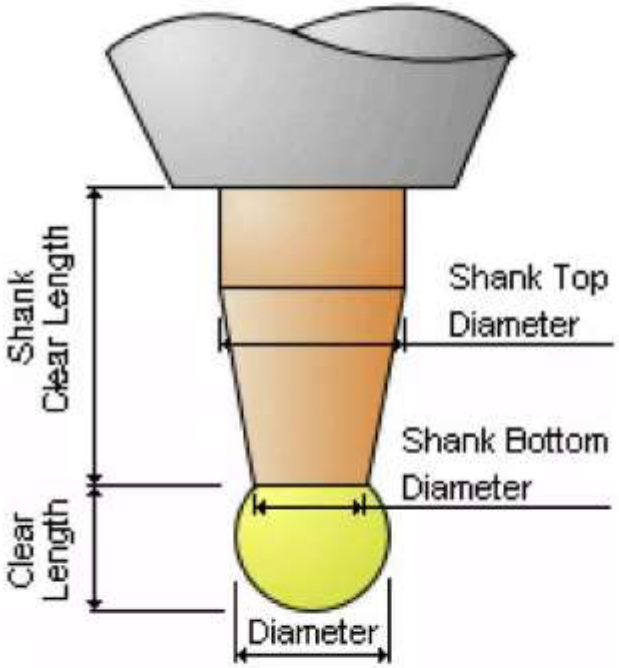
Shank
Clear Length
Shank Top
Diameter
Shank Bottom
Diameter
Clear
Length
Diameter

- **Slot Mill and Lollipop Cutter Notes:**
- A **Slot Mill** cutter can only be defined if the **Cutter Type Geometry** is either a Bull Nose or Flat End.
- A **Lollipop** cutter can only be defined if the **Cutter Type Geometry** is a Ball End.
- If the **Cutter Type Geometry** is a Tapered cutter, the **Slot Mill** and **Lollipop** type cutters cannot be defined.
- For the **Slot Mill** and **Lollipop** type cutters, a holder must be defined and the Shank row of holder parameters must be complete.
- **Slot Mill** and **Lollipop** type cutters can be defined in any NC procedure. However, if they are used in procedures other than 5X Aerospace and Morph Between 2 Curves, the NC calculations are based on regular cutters (but the simulation would show the Slot Mill or Lollipop cutter).
- Use of a **Slot Mill** and **Lollipop** type cutter in the Morph Between 2 Curves procedure, requires a license.