THIS DOCUMENT AND THE DATA DISCLOSED HEREIN OR HEREWITH IS THE PROPERTY OF ALTIUM LIMITED AND MAY BE FREELY DISTRIBUTED IN WHOLE. NO RIGHTS ARE RESERVED OR EXPRESS OR IMPLIED WARANTEE GIVEN.

REVISION	DESCRIPTION	DATE	APPROVED

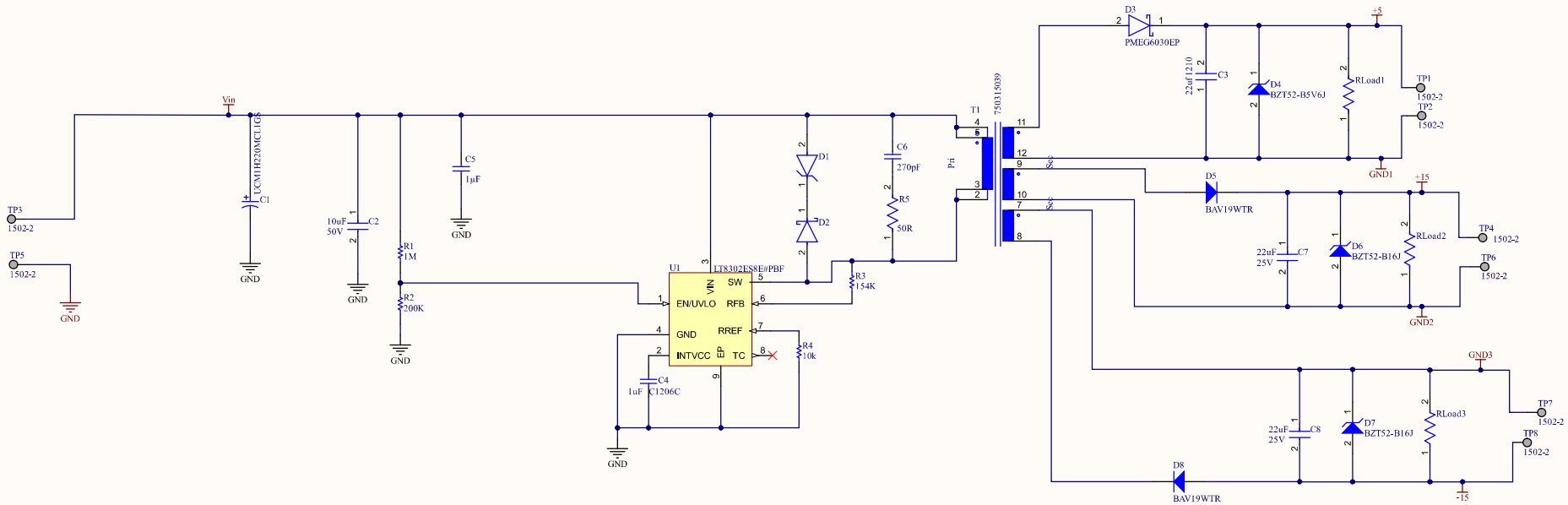

APPROVALS	DATE
ENG: *	
DSN: *	
CHK: *	
REFERENCE DOCUMENTS	
BOM:	
ASSY DWG:	
FAB DWG:	
PCB DWG:	

PROJECT: Altium *

PROJECT REVISION: | DOCUMENT REVISION: | DESIGN ITEM: 32255a5a117e640ee06f38de6197bd6c47a

TITLE: *

SIZE	CAGE CODE	DWG NO.	REV
B			

SCALE: | FILE NAME: SPlitRail_DC-DC_Converter_SCH.SchDoc | SHEET 1 OF 1

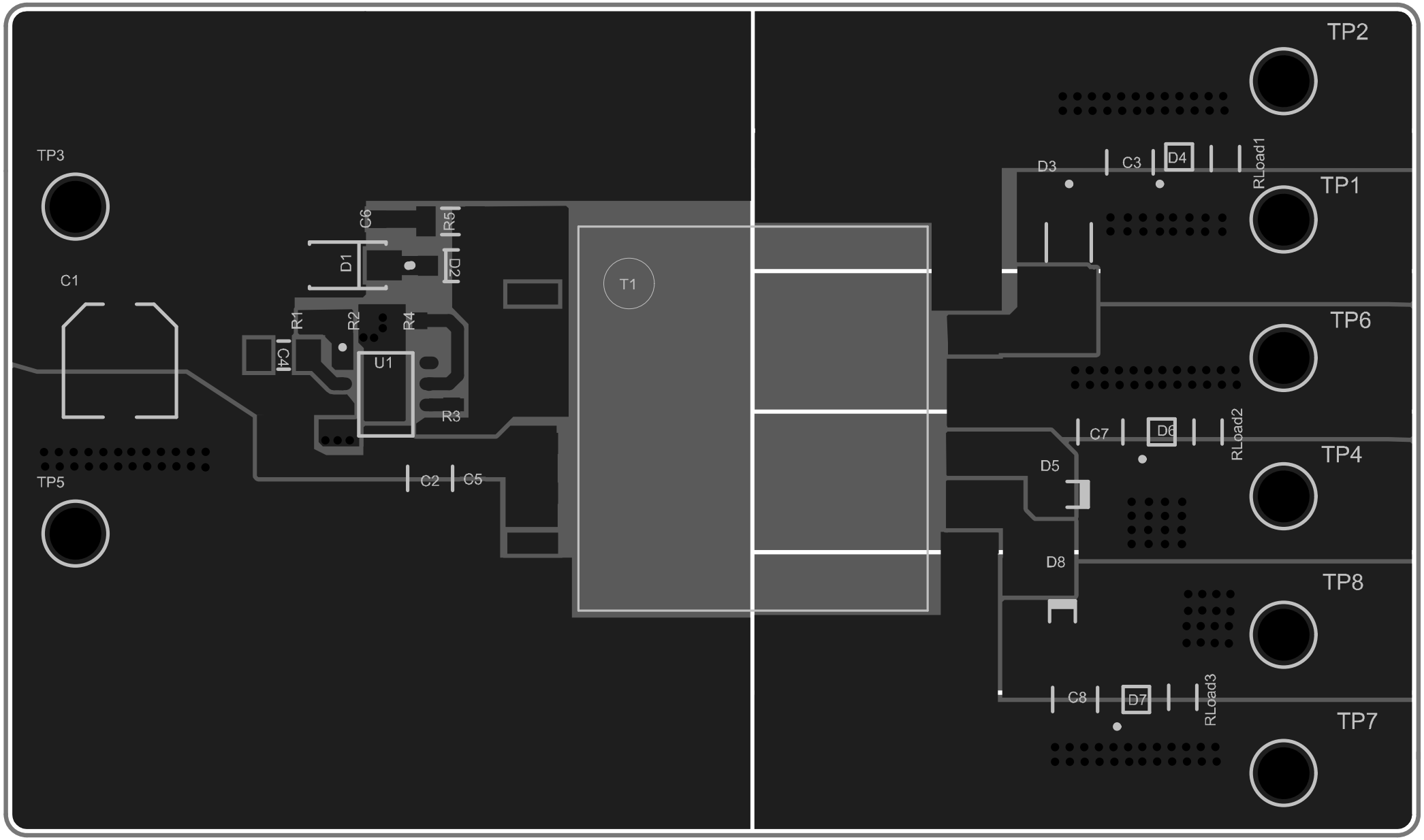
TP2
TP3
D3
C3
D4
RLoad1
TP1
C6
R5
D1
D2
T1
C1
R1
R2
R4
TP6
C4
U1
R3
C7
D6
RLoad2
TP4
D5
TP5
C2
C5
D8
TP8
C8
D7
RLoad3
TP7