THIS DOCUMENT AND THE DATA DISCLOSED HEREIN OR HEREWITH IS THE PROPERTY OF ALTIUM LIMITED AND MAY BE FREELY DISTRIBUTED IN WHOLE. NO RIGHTS ARE RESERVED OR EXPRESS OR IMPLIED WARRANTIES GIVEN.

REVISION	DESCRIPTION	DATE	APPROVED

PDN and I2c Isolator

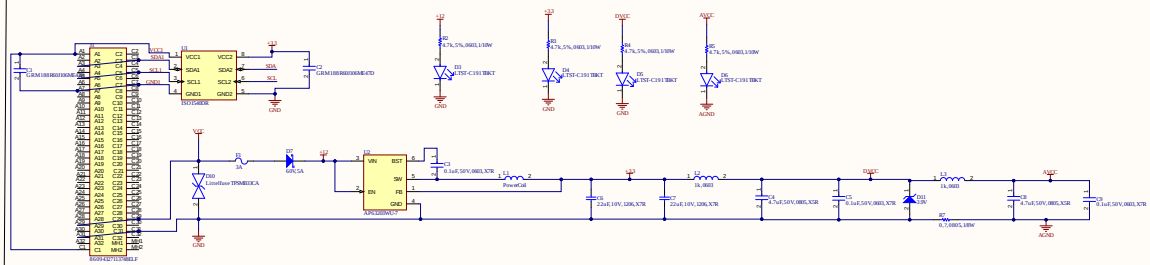

STM32

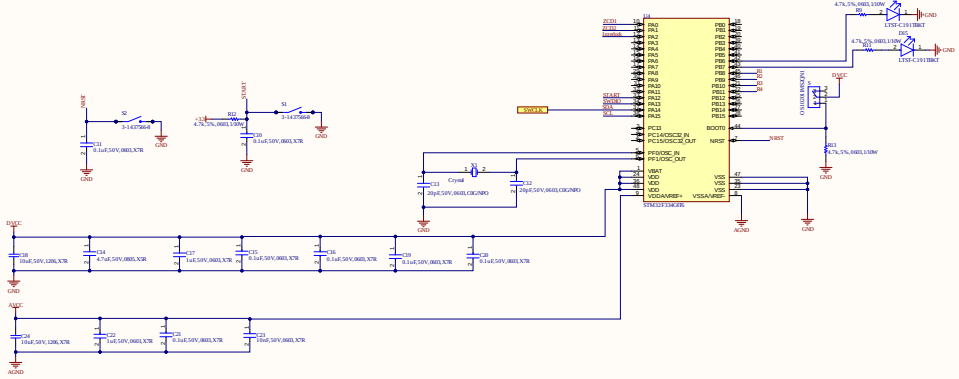

Zero Cross Detection

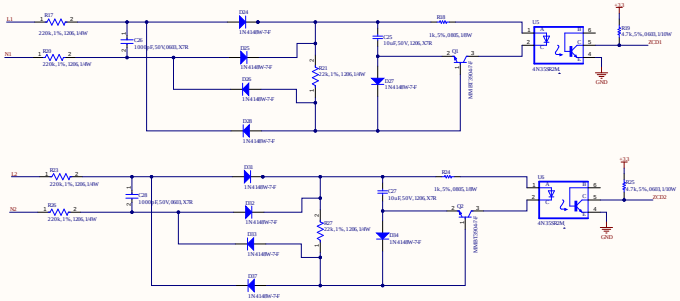

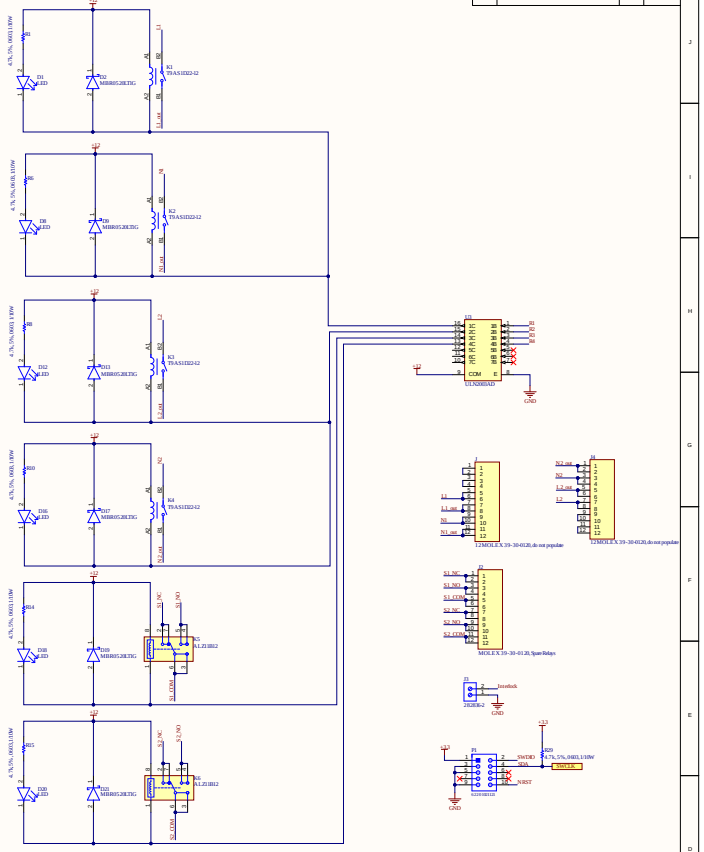

APPROVALS	DATE	PROJECT	Altium
DRAN			
DSIN		PROJECT REVISION	
CHK			
REFERENCE DOCUMENTS		TITLE	
ROM			
ASSY DWG		SIZE D	CAGE CODE / DWG NO. / REV
FAB DWG			
PCB DWG		SCALE / FILE NAME Power_Ctrl_Board_SCH.SchDoc	SHEET 1 OF 1

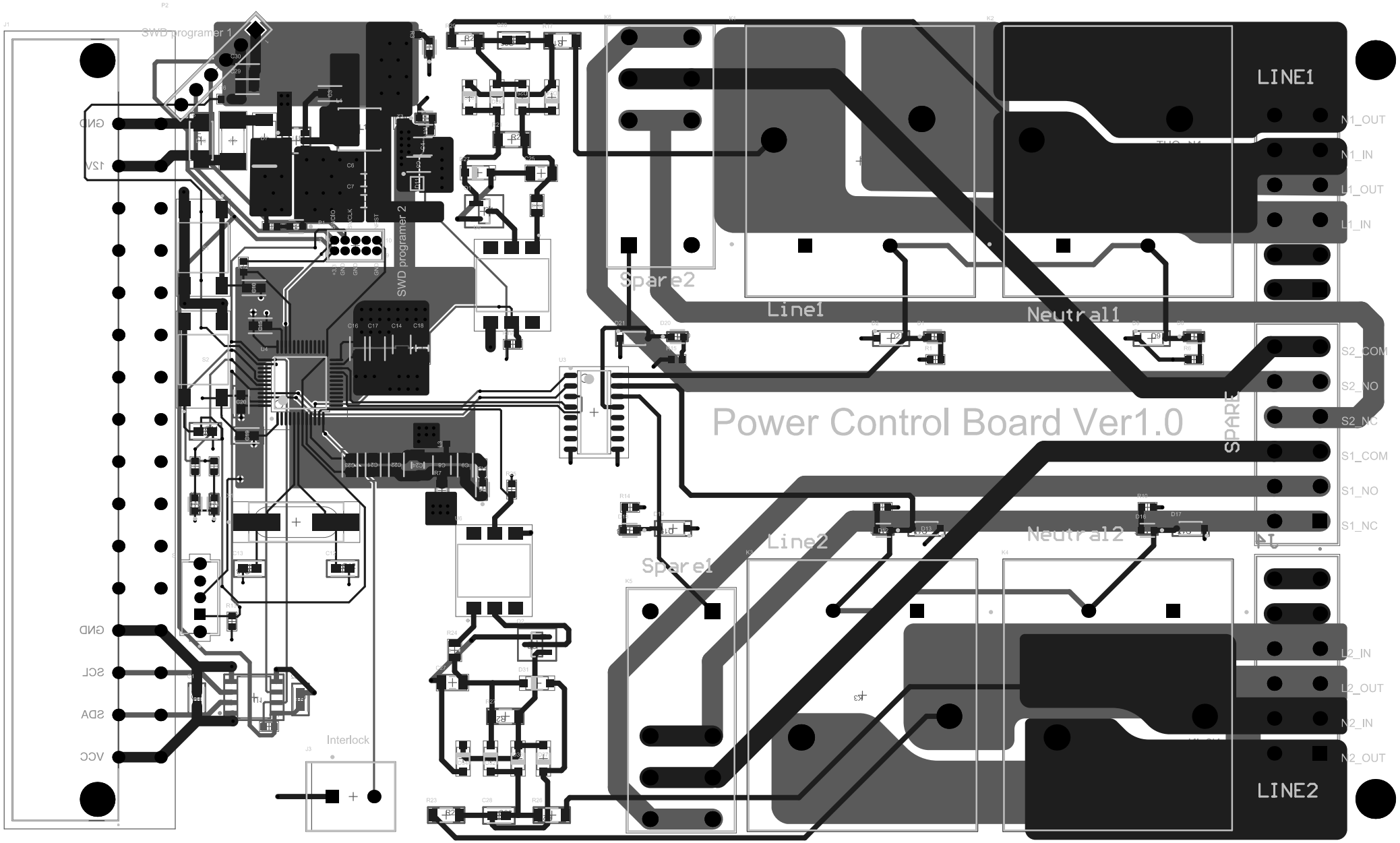
Power Control Board Ver1.0
LINE1
LINE2
Line1
Neutral1
Line2
Neutral2
Spare1
Spare2
SPARE
SWD programer 1
SWD programer 2
Interlock
GND
12V
GND
SCL
SDA
VCC
N1_OUT
N1_IN
L1_OUT
L1_IN
S2_COM
S2_NO
S2_NC
S1_COM
S1_NO
S1_NC
L2_IN
L2_OUT
N2_IN
N2_OUT

Board Stack Report