THIS DOCUMENT AND THE DATA DISCLOSED HEREIN OR HEREWITH IS THE PROPERTY OF ALTIUM LIMITED AND MAY BE FREELY DISTRIBUTED IN WHOLE. NO RIGHTS ARE RESERVED OR EXPRESS OR IMPLIED WARANTEE GIVEN.

REVISION	DESCRIPTION	DATE	APPROVED

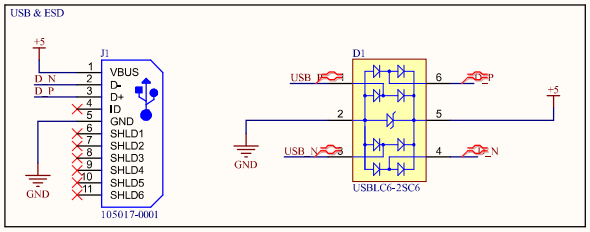

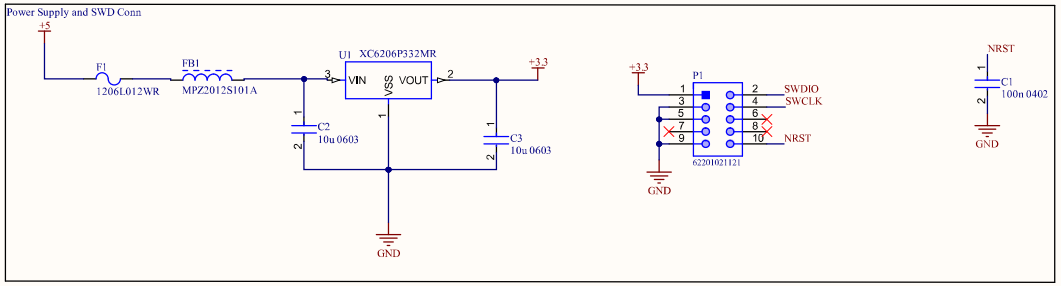

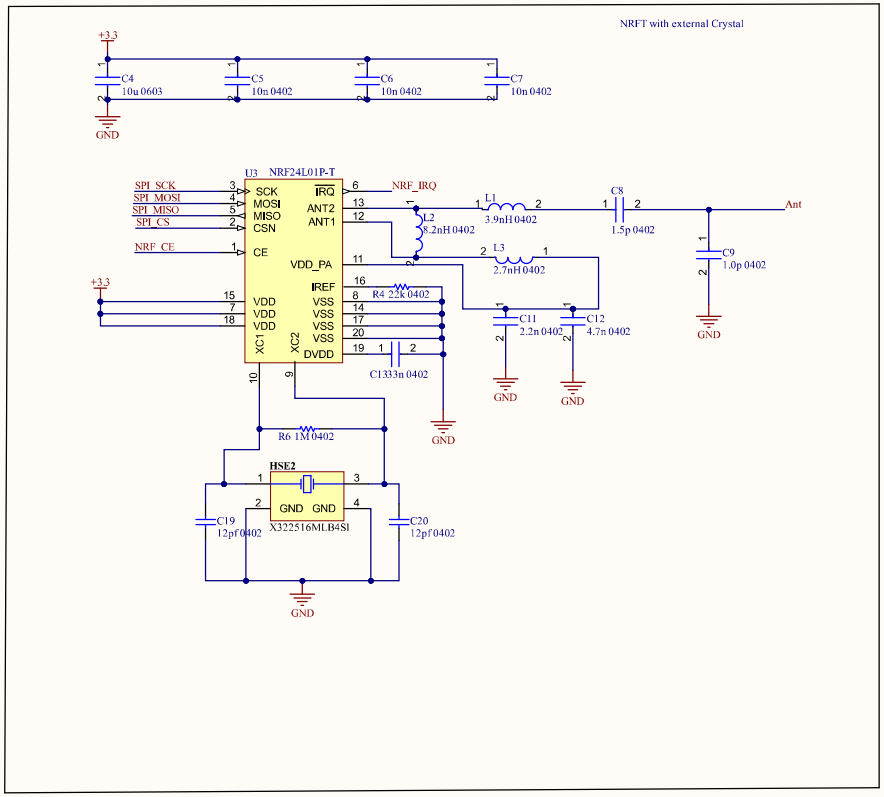

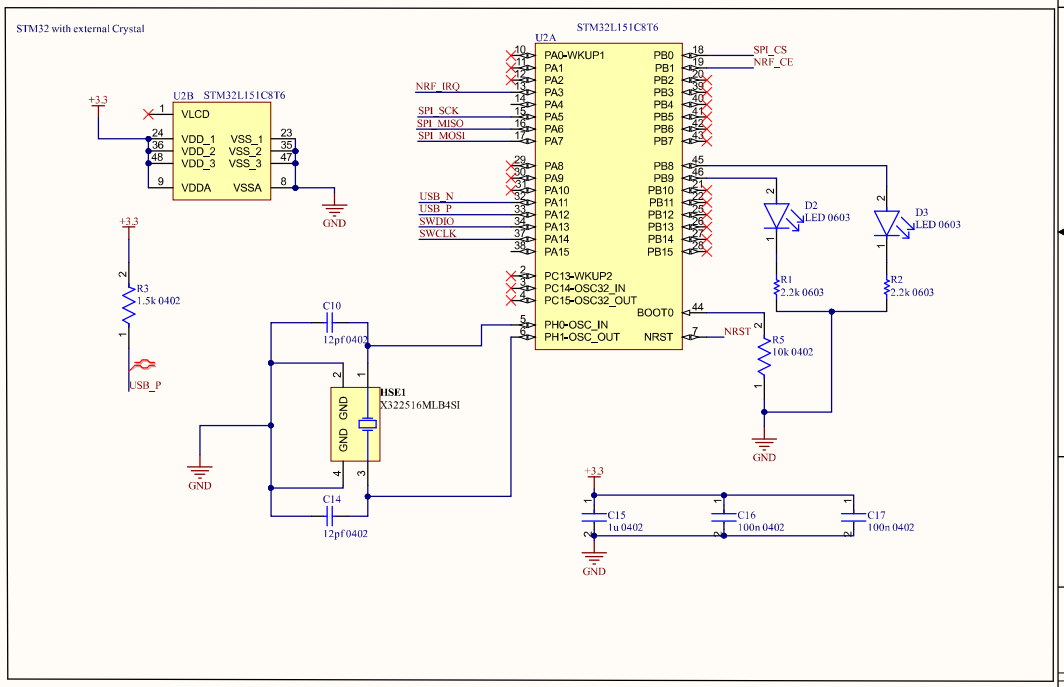

APPROVALS	DATE
ENG:	
DSN:	
CHK:	
REFERENCE DOCUMENTS	
BOM:	
ASSY DWG:	
FAB DWG:	
PCB DWG:	

PROJECT: Altium

PROJECT REVISION: DOCUMENT REVISION: DESIGN ITEM: a4c53bc1432c0c6849550c02f0f0f0

C9
C8
C11
C12
C6
R4
C7
C4
C13
U3
C5
C17
C14
HSE1
C16
C10
U2
C15
R5
D2
C2
C3
R3
R2
R1
FB1
U1
F1
J1
J4
2
1
10
9