VECTOR

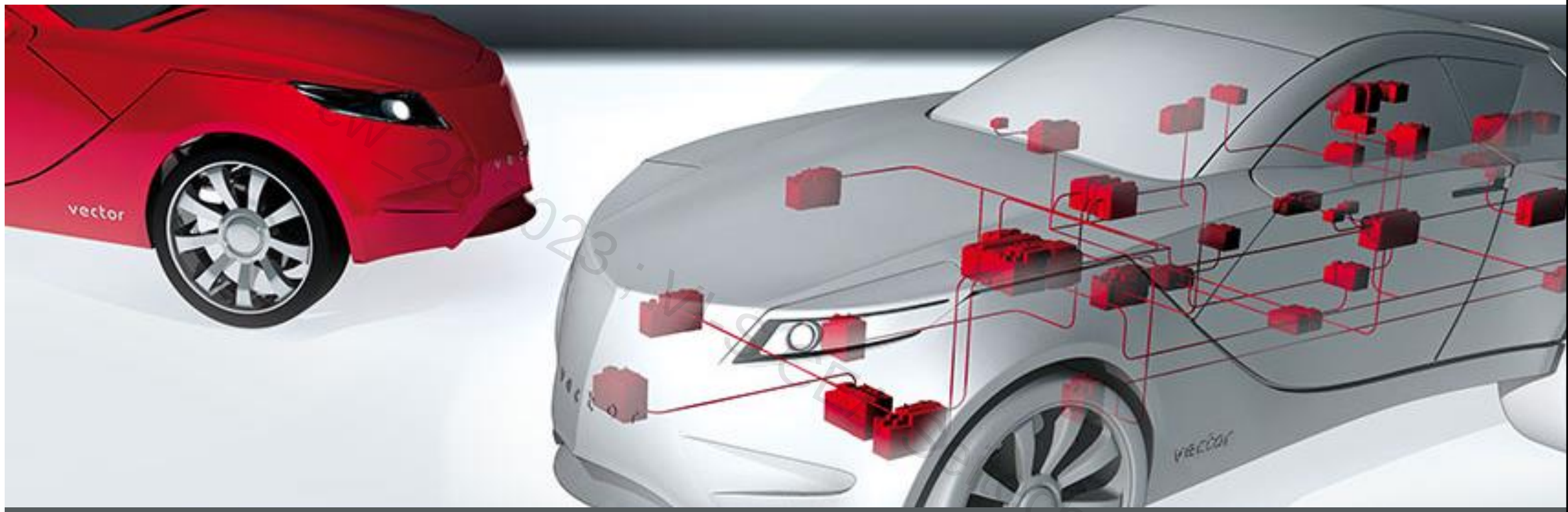

AUTOSAR in Practice

Busses

Agenda

- **Introduction**
- Busses - LIN
- Busses - FlexRay
- Ethernet
- Coming up next

cw_26 2023 ; VI-S CEA Seitech

Bus access methods

- Master-Slave method
  - Master ECU controls data transmission on the bus
  - Slave ECUs may only respond to requests by the Master ECU
  - Example: **LIN** bus
- Token passing method
  - Send authorization (Token) is passed from one ECU to the next
  - Sending is only possible with send authorization
  - Examples: Token ring, Profibus
- Event-driven method
  - Any ECU can access the available bus at any time
  - Priority assignments makes it possible to control message traffic
  - Examples: **CAN** bus, **Ethernet**
- Time-synchronous method
  - Sending process occurs in periodic time windows
  - Time windows are allocated to the individual ECUs
  - Examples: **FlexRay**, **TTCAN**

cw_26 2023 ; VI-S CEA Scitech

Bus access methods

Bus access methods control access to the medium used. They are used to define which participants (nodes, sending stations) may occupy the bus for a send operation. Bus access methods may be subclassified into four types:

- Master-Slave methods
  In the Master-Slave methods, data transmission is controlled by a higher-level node (Master). Subordinate nodes (Slaves) may only access the bus when there is a request from the Master that should be answered.
- Token passing methods
  In the Token Passing method, the right to access the bus is passed from one node to the next with the help of a send authorization (Token). This method ensures that only one node is authorized to send at any given time.
- Event-driven methods
  In event-driven methods, any ECU may access the available bus at any desired point in time. As soon as a node obtains bus access, all other nodes must wait until the bus is released again. As an extension, it is also possible to assign message priorities to exert control over the message traffic. The most popular event-driven methods are CSMA/CD (Carrier Sense Multiple Access / Collision Detection → Ethernet) and CSMA/CA (Carrier Sense Multiple Access / Collision Avoidance → CAN bus).
- Time-synchronous methods
  Time-synchronous methods provide participants in a network with periodic time windows in which each individual node may send out its desired messages. In contrast to Token Passing methods, no send authorization is passed. Instead, the time windows are permanently allocated to the individual nodes. In FlexRay, the TDMA method is used.

cw_26_2023 ; VKS CEA-Leitech

VECTOR

CAN, LIN, FlexRay and Ethernet in AUTOSAR

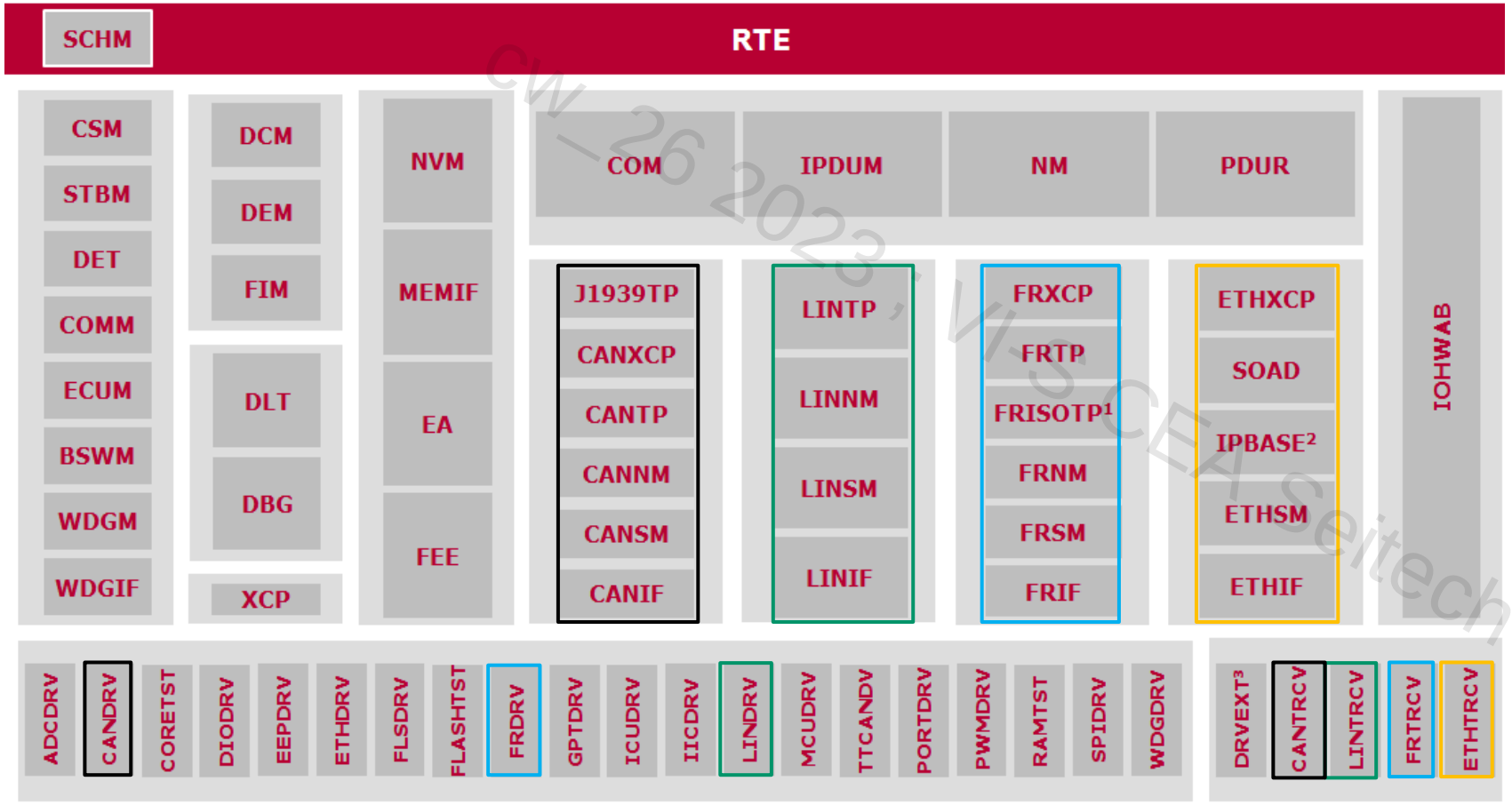

CAN **LIN** **FlexRay** **Ethernet**

CW_26 2023, VISCEA Seitech

CAN – LIN – FlexRay

Appearance of AUTOSAR for CAN, LIN and FlexRay is almost identical

- Handling of Data Elements in the higher layers independent of underlying bus system
- Depending on bus protocol concepts there are differences…

cw_26 2023 ; VIS CFA Seitech

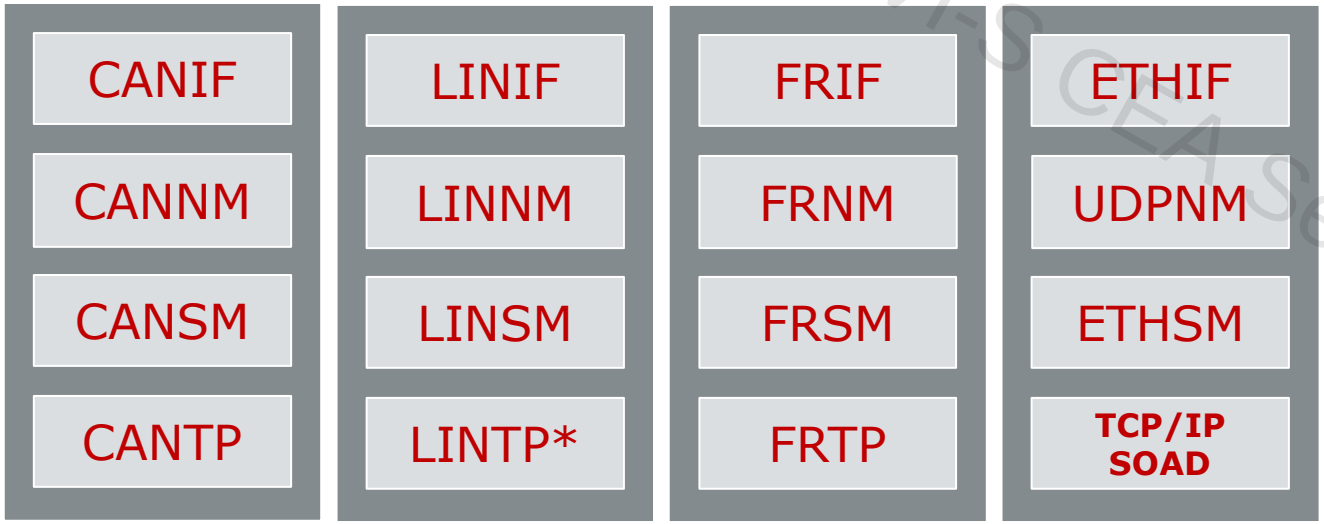

*option included in LinIf

Agenda

- Introduction
- **Busses - LIN**
- Busses - FlexRay
- Ethernet
- Coming up next

cw_26 2023 ; VI-S CEA Seitech

CAN – LIN

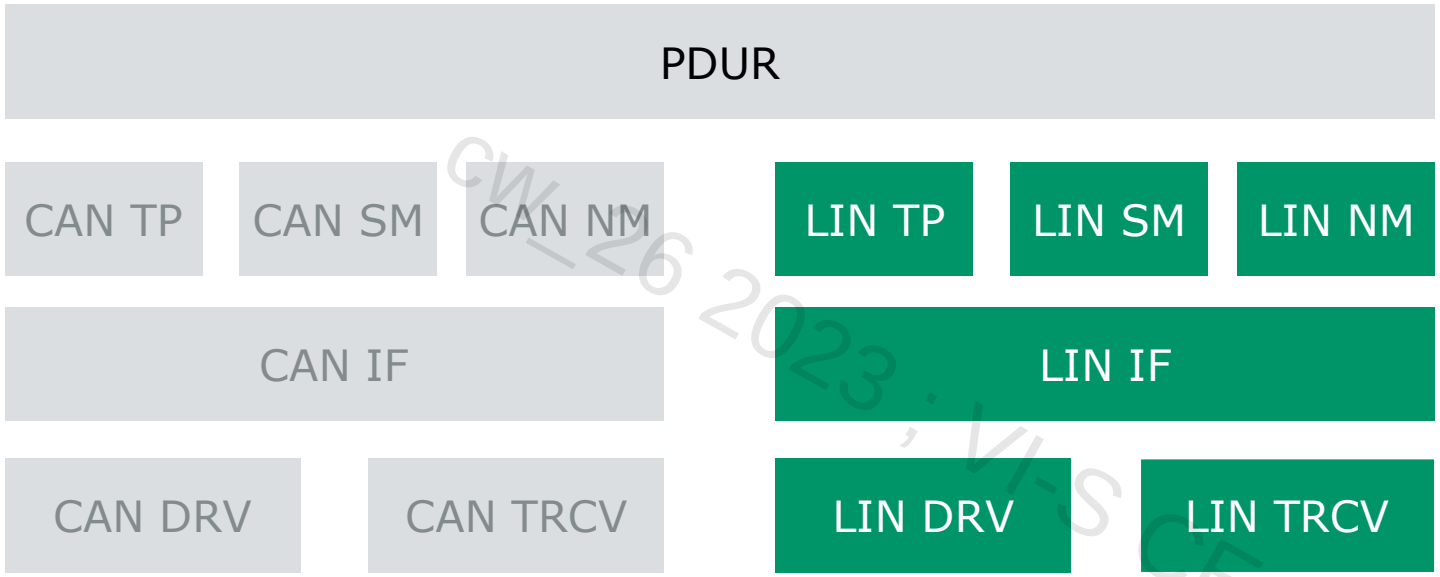

CW_26 2023 ; VLS CEA Seitech

The LinNm functionality only coordinated between the network mode and the sleep mode of the LIN cluster.

In AUTOSAR <v4.0 is not a module of its own. Ther, tts lean functionality is performed by the LinSM.

In AUTOSAR >v4.0 the LINNM is located below the NM.

LIN BSW Modules

LIN SM

- Schedule requests, set transceiver mode, control wakeup and sleep

LIN DRV

- Low level driver for LIN communication via SCI/UART of the µC.
- Initialization of SCI Hardware
- API for generating LIN Synch break
- LINNM
- Manage Network Mode or Sleep Mode, Transmit NM message
- Provide Interface to NM
- coordinator functionality

LIN TRCV

- Driver for external LIN Transceiver
- Control of wakeup/sleep
- Network diagnostics (short circuit, open line, …)

LIN IF/TP

- Schedule table implementation
- Transmission/Reception of LIN frames
- Sleep/Wakeup/Error/Timeout Handling
- Transport Protocol for Diagnostics

cw_26_2023 ; VI-S CEA-Sciteck

Network Description

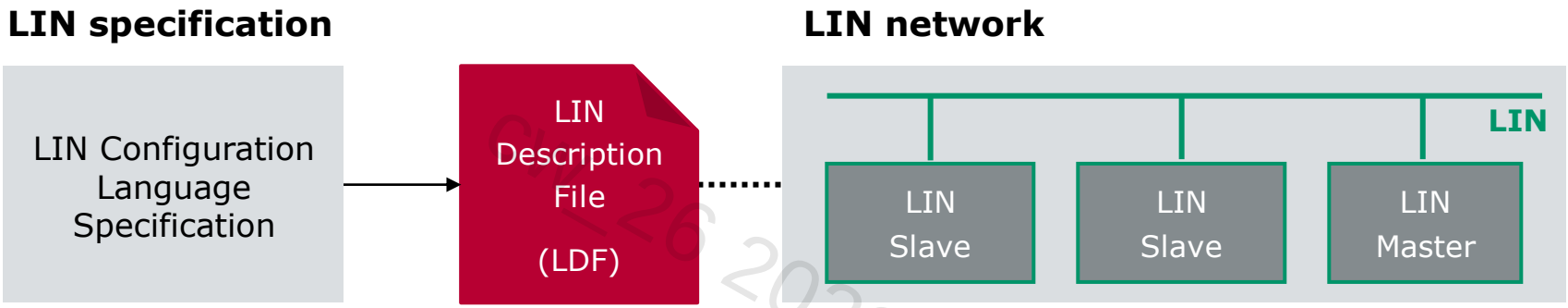

- The LIN Description File (LDF) describes a LIN network using the language defined in the LIN Configuration Language Specification
- The LDF contains information relevant to network development and analysis
  - Global information such as baud rate and versions
  - Information on nodes, signals and frames, sender and receiver
  - Schedule

CAN 26 2023 : VIS CEA Seitech

Network Description

The LIN Configuration Language Specification is utilized to create the so-called "LIN Description File" or "LDF". The LIN Description File encompasses, among other things, the LIN protocol version, LIN language version, baud rate, definitions of nodes, signals and frames, as well as information on the schedule. Consequently, the LDF is the foundation for developing a LIN network and associated LIN nodes and for analyzing and observing a LIN network.

The syntax of the LDF is so simple that it is rather easy to create such LDFs manually. Nonetheless, computer-supported development, i.e. automatic design and generation, play a dominant role here. That is because introduction of the so-called "Node Capability Language" makes it possible to create LDFs automatically.

CN_26_2023 - VKS CEA Seitech

Centrally controlled message distribution system

- LIN nodes do not have equal rights due to master-slave architecture
- LIN master delegates communication (Delegated Token Principle)
- Message distribution based on message addressing
- 64 message addresses (identifiers)

CM_26 2023 ; VI-S CEA Seitech

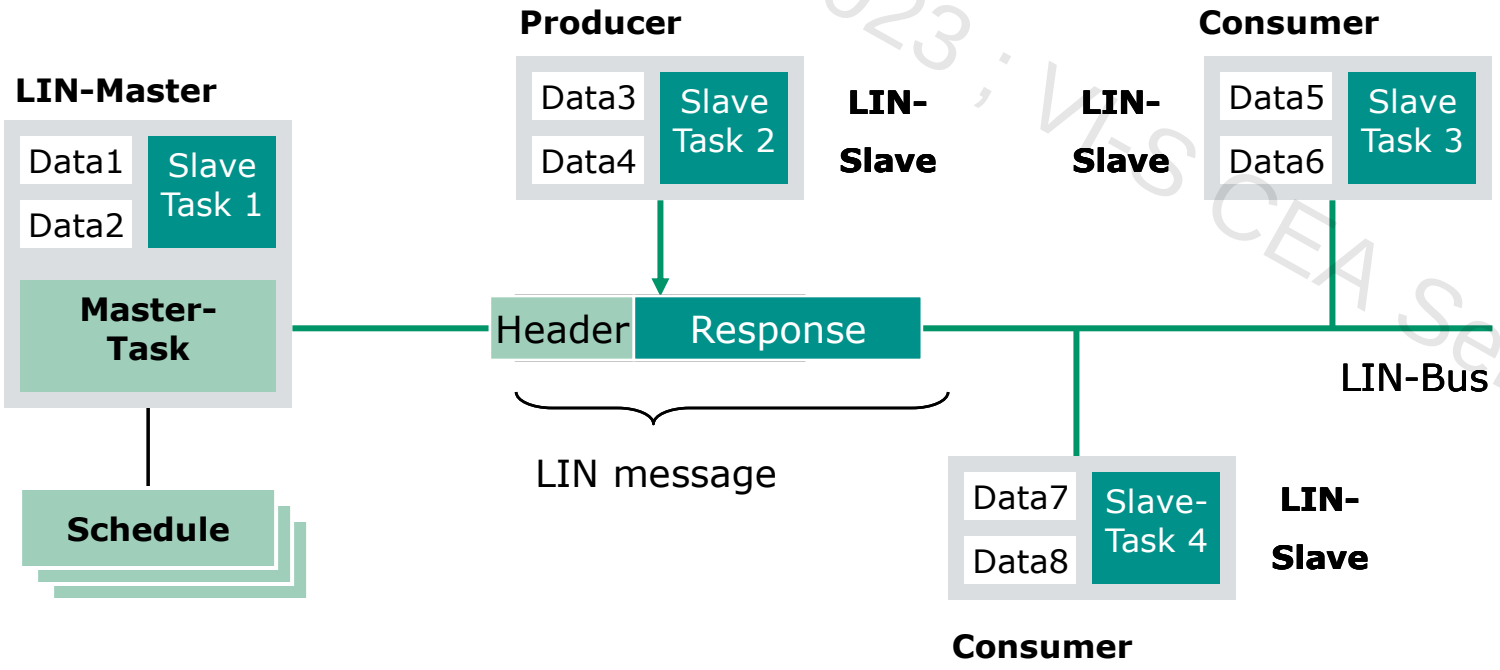

Centrally controlled message distribution system

The LIN network is based on a master-slave architecture. Reason: The master/slave method underlying a master-slave architecture is easy and economical to implement. One node is chosen to control all communication. This is the LIN master. The LIN master performs the functionality of a bus arbiter with the help of the so-called “master task” and the so-called “LIN schedule”.

The LIN schedule establishes the send times of the LIN messages to be transmitted. Conforming to the LIN schedule, the LIN master places special messages (headers) on the bus at defined times. A header can be understood as a request, and it contains a message address. This is evaluated by the LIN slaves. A LIN slave has three alternatives for reacting to the header: Send response, receive response, neither send nor receive.

The combination of header and response is referred to as a LIN message. A total of up to 64 LIN messages may be defined. Each LIN message is available for reception by all LIN nodes due to message addressing, even the LIN master, if it has a slave task. The LIN network is essentially a message distribution system with central control.

CW 26 2023 Vector Seitech

Scheduling

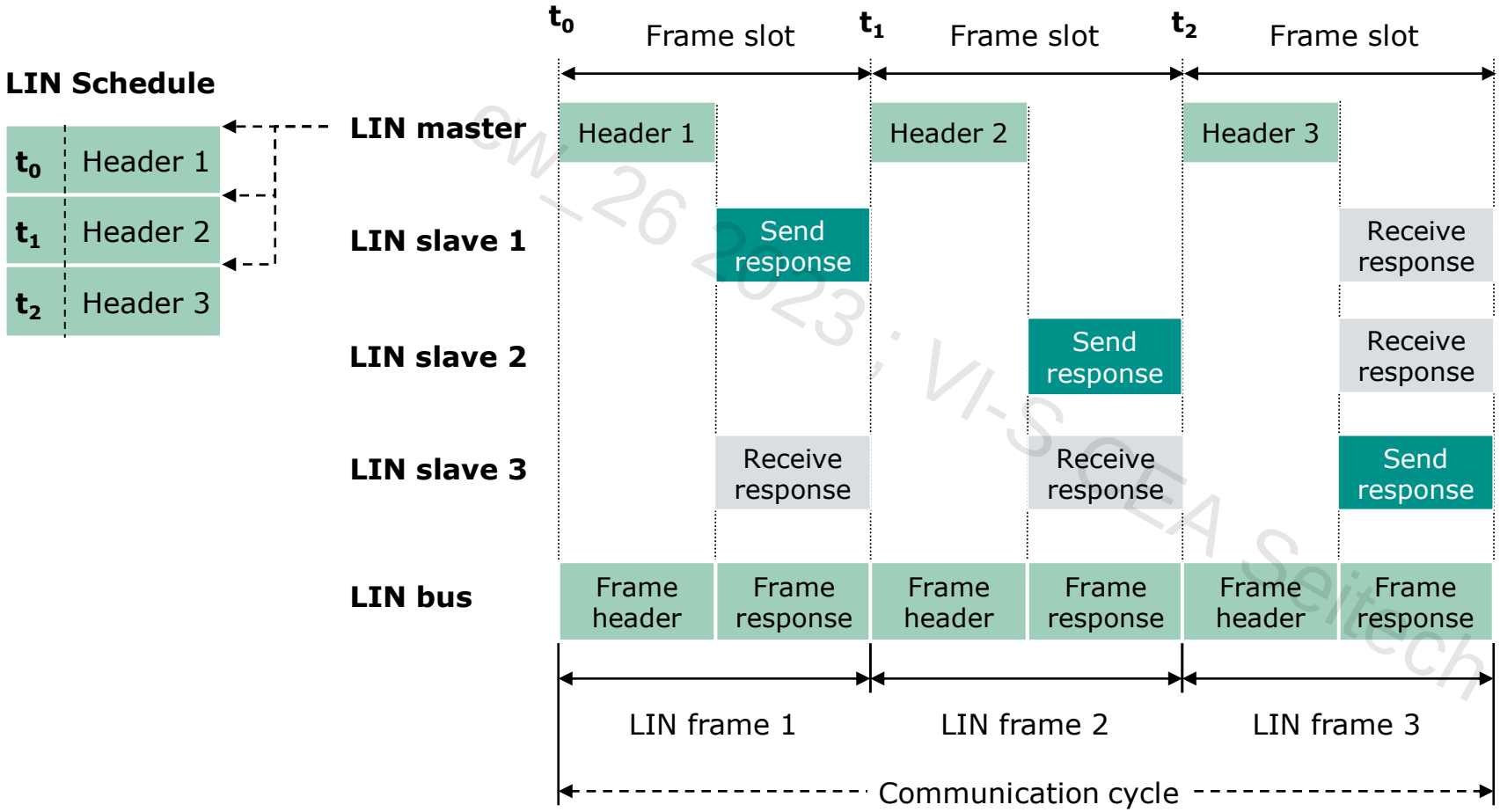

CW_26 2023 · VI-S CEA Seitech

Messages - Identifier

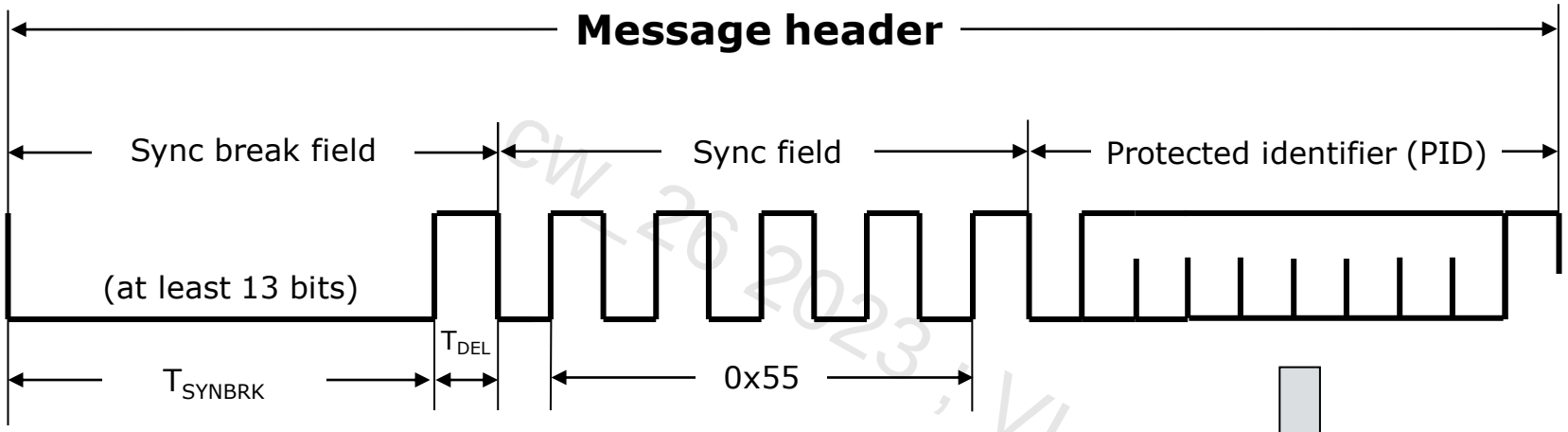

- P0 = even parity over ID0, ID1, ID2, ID4
- P1 = odd parity over ID1, ID3, ID4, ID5

ID 0	ID 1	ID 2	ID 3	ID 4	ID 5	P 0	P 1

LSB MSB

- Address range: 0-63
- 60, 61: Diagnostics
- 62, 63: Reserved

The identifier is transmitted in the context of sending the protected identifier. It is composed of six bits. This means that 64 different LIN messages can be specified. The identifier is protected by two parity bits (even and odd parity). The two identifiers 60 and 61 are utilized for diagnostics. The two identifiers 62 and 63 are reserved.

cw_26_2023 ; VI-S CEA Seitech

Message - Response

- The message response is sent by a slave task
- The message response contains the data and the checksum
  - Classic checksum over data field
  - Enhanced checksum over data field and ID field

cw 26 2023 ; VI-S CEA Seitech

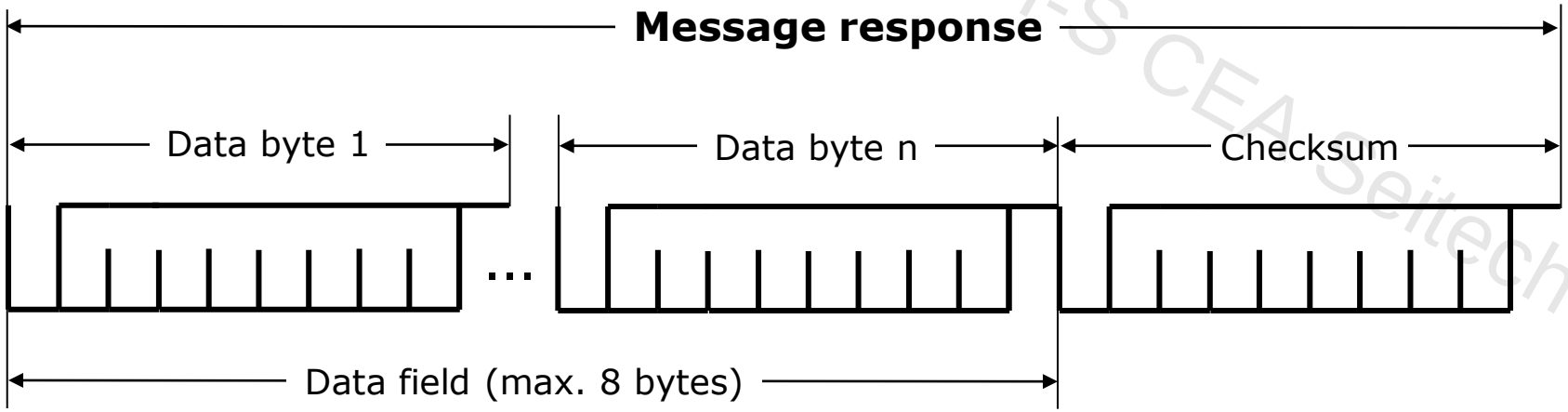

Message - Response

The message response is sent by a LIN slave delegated by the message address. A maximum of eight useful bytes may be transported with one message response. It must be ensured that byte transmission begins with the LSB. In transporting a word, transmission begins with the low byte (little endian transmission, Intel mode). In principle, a message response can be received and accepted by all LIN slaves.

The useful data are protected by a checksum. Checksum formation is based on modulo-2 arithmetic and carry bit transmission. The individual useful bytes are added by modulo-2 arithmetic. Overflow bits are transmitted. Finally, the result is inverted.

There are two different types of checksum: Classic checksum and enhanced checksum. The classic checksum only protects the useful data. The enhanced checksum protects the useful data and the identifier. In LIN 1.3 conformant LIN nodes, the message responses to be transmitted are always equipped with the classic checksum, because LIN 1.3 does not recognize the enhanced checksum. It should be ensured that LIN messages with identifiers 60 and 61 (diagnostics) are always protected by the classic checksum.

CW-16 2023 ; VIS CAN Seitech

Message Types

Unconditional frame (ID 0-59)

- A message response is assigned to the message header
- Message header is always sent in the reserved frame slot

Event triggered frame (ID 0-59)

- Several message responses are assigned to the message header
- Message header is always sent in the reserved frame slot
- Message response is only sent if necessary
- Collisions are resolved by the LIN master

Sporadic frame (ID 0-59)

- Multiple unconditional frames are assigned to a frame slot
- Transmission of unconditional frames depends on needs

Diagnostic frame (ID 60-61)

- ID=60: Master request frame (= Diagnostic request)
- ID=61: Slave request frame (= Diagnostic response)

CW 26 2023 ; VI-S CEA Seitech

Message Types

Different frame types are available for data transmission in a LIN network: Unconditional frame, event triggered frame, sporadic frame and diagnostic frame.

The unconditional frame is characterized in that there is exactly one sender for the message response. In contrast to this, in event triggered frames multiple responses are assigned to the header, which if necessary can be sent by the relevant LIN slaves. A collision leads to a switchover to the so-called "collision resolving schedule table".

A sporadic frame represents a group of unconditional frames that share the same frame slot and are transmitted as needed. In the case where multiple nodes wish to send, the order of sending is determined by the priority of the unconditional frames. If none of the slaves wishes to send, the frame slot remains empty.

The two IDs 0x3C and 0x3D are used for diagnostics. The LIN frame with ID 0x3C is referred to as the master request frame, and it corresponds to the diagnostic request. The LIN frame with ID 0x3D is identified as the slave request frame, and it corresponds to the diagnostic response. The layout of these two frames results from the node configuration and identification specification.

SW_36_2023_VISCEA_Seitech

Status Management

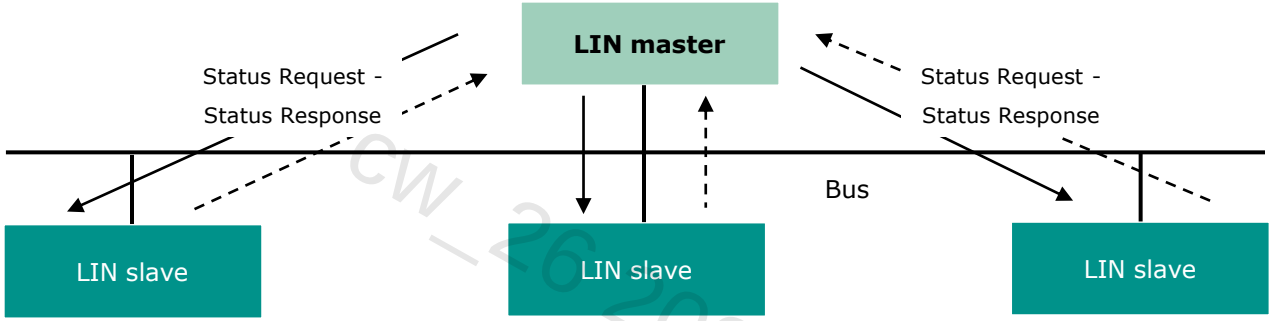

- Error signaling with the help of "Status bits" (Response_Error)
  - Use of Unconditional Frames
    - Message header: Status request
    - Message response: Status response (with Response_Error)
- LIN master collects the status bits
- Error handling is not part of the LIN specification

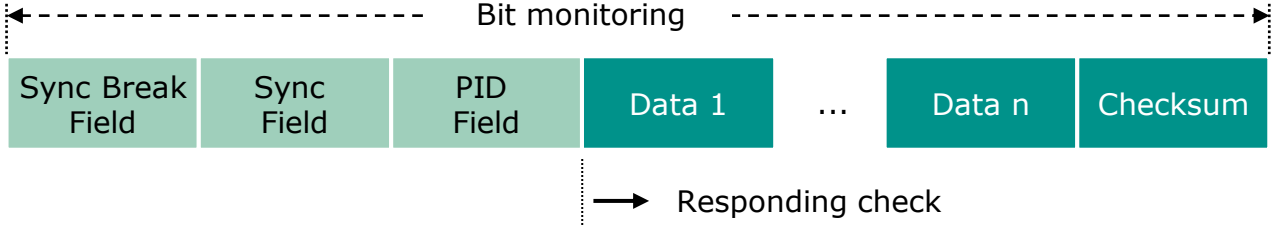

A LIN slave manages two status bits (error_in_response and successful_transfer), which are available for further processing. The LIN slave must transmit the "error_in_response" bit once per communication cycle with an unconditional frame. In principle, the message corresponds to the status request, and the message response corresponds to the "error_in_response" bit of the status response. This bit is also referred to as the status bit or "response_error". Error handling is based on the status bits collected by the LIN master; however, this is not part of the LIN specification.

CW_26_2023 : VT-S CEA Seitzer

Transmission Modes

LIN IF has knowledge about Schedule tables

- LIN IF controls transmission of LIN frame according to current Schedule table
- No transmission modes like for CAN

cw_26 2023 ; VI-S CEN Seitech

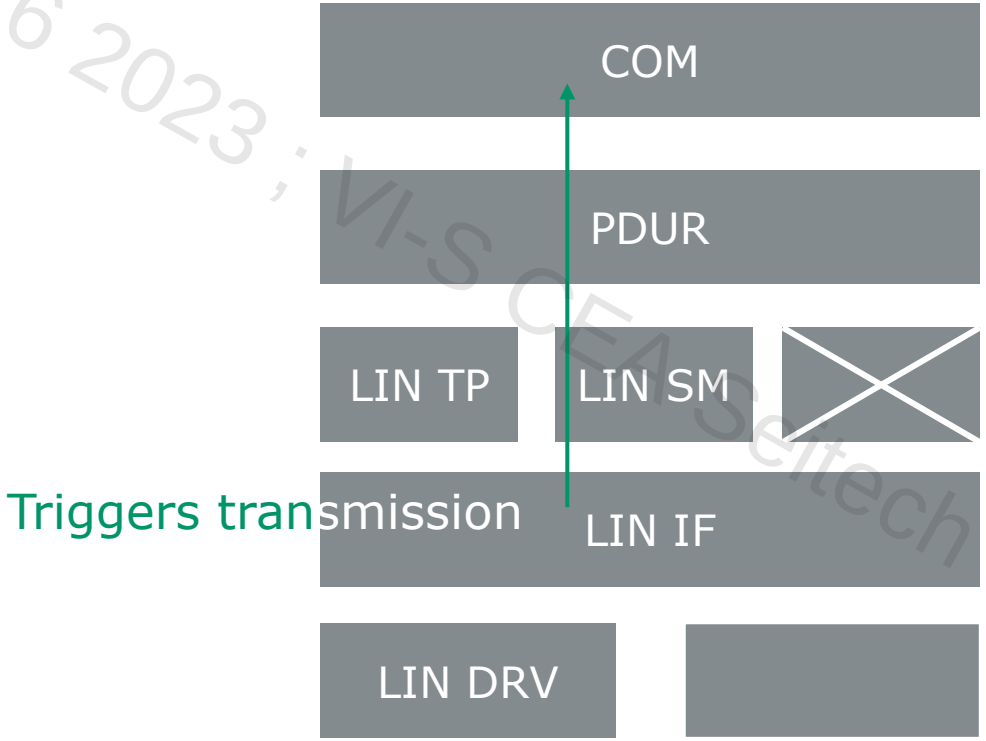

Sleep and Wakeup

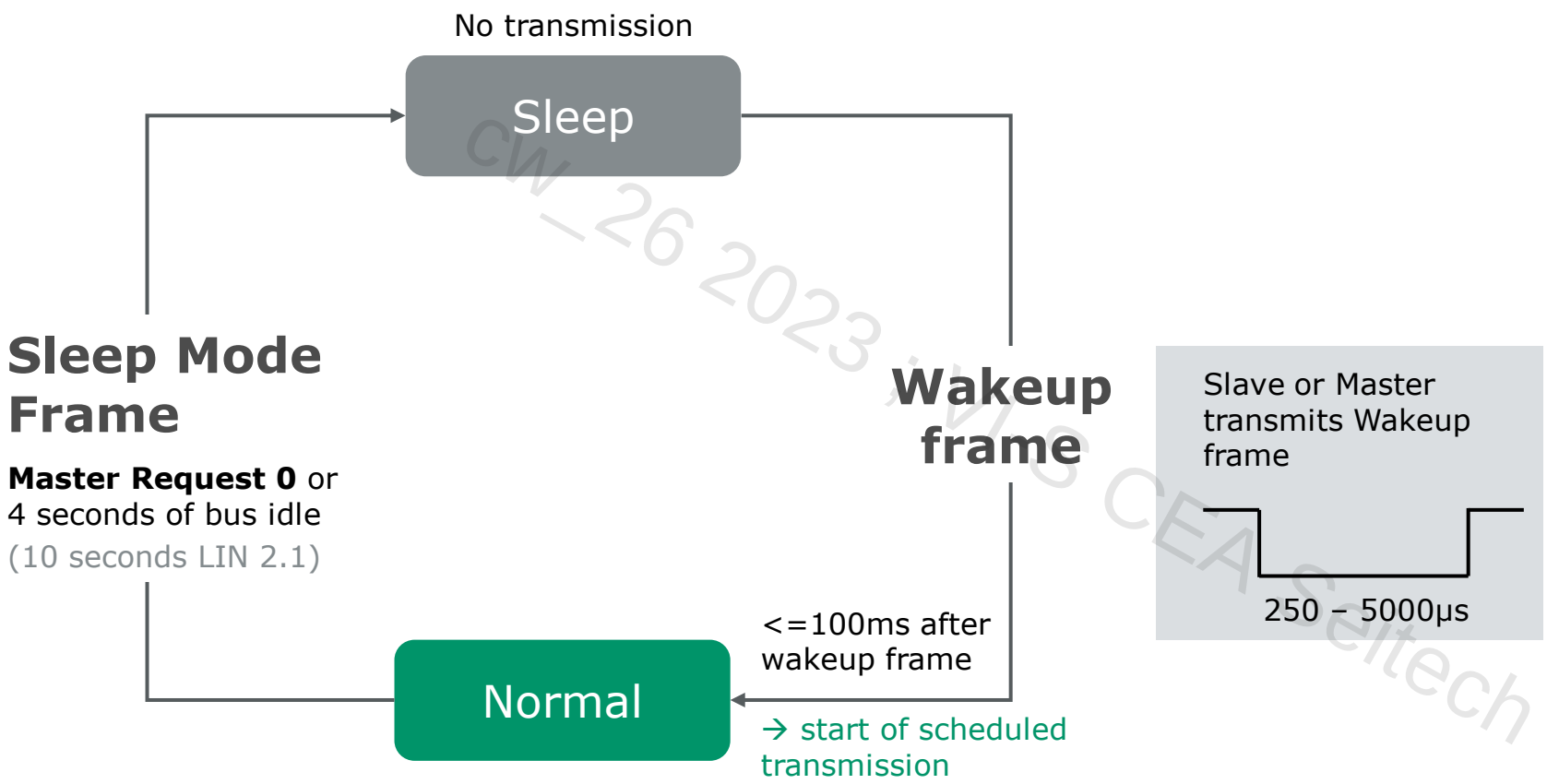

CW_26 2023 VIS CEA Seitech

Agenda

- Introduction
- Busses - LIN
- **Busses - FlexRay**
- Ethernet
- Coming up next

cw_26 2023 ; VI-S CEA Seitech

CAN – FlexRay

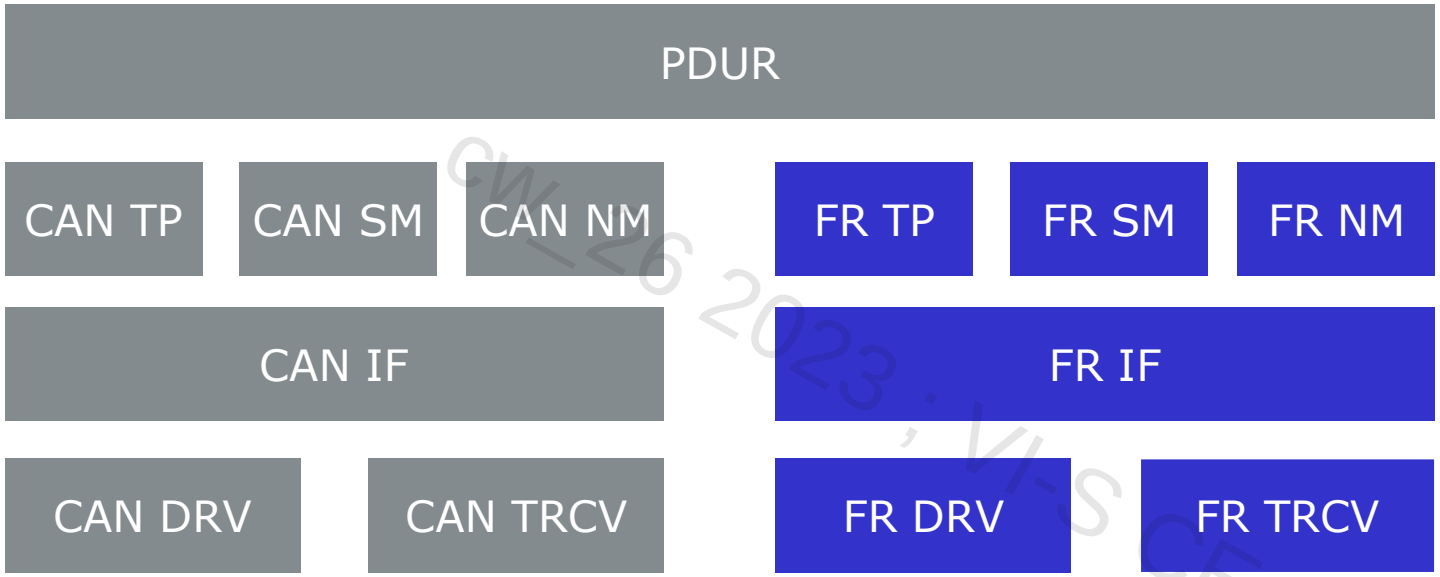

CW_26 2023 ; VFS CEA Seitech

FlexRay BSW Modules

FR SM

- Mastering states for FlexRay bus

FR IF

- Provides equal mechanism to access FlexRay bus channel

FR TP

- Uses dynamic and static part of communication
- Segmentation of data in transmit direction
- Collection of data in receive direction

FR NM

- Synchronized transition to bus sleep
- Network configuration at startup and during operation
- Error recovery

FR DRV

- Abstracts hardware-related differences of FlexRay controllers
- Provides uniform API

FR TRCV

- Controls wakeup/sleep
- Network diagnostic (short circuit, open line, …)

cw_26 2023 ; VI-S CEA Seitech

Network Description

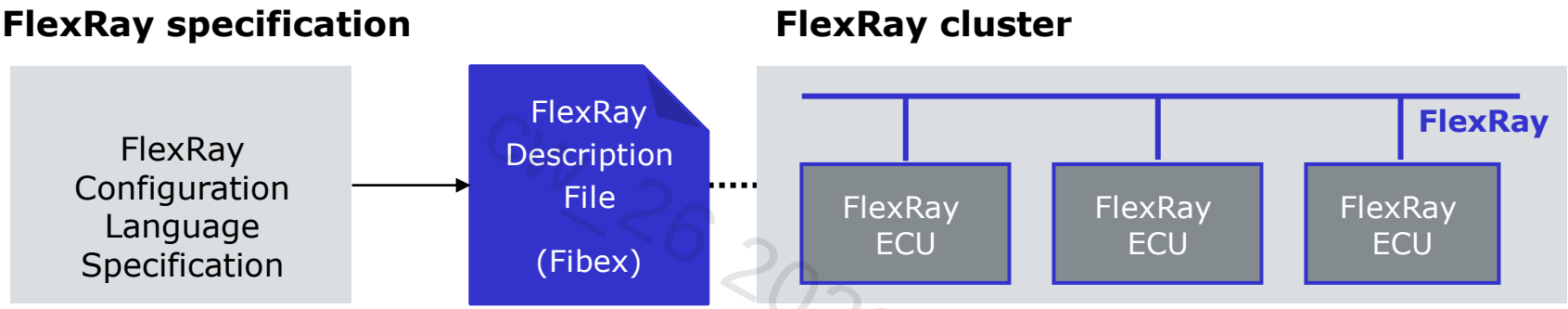

- The Field Bus Exchange Format (Fibex) describes a FlexRay network using the language defined in the Field Bus Exchange Format.
- The Fibex contains information relevant to network development and analysis
  - Global information such as e.g. baud rate
  - Information on nodes, signals and frames, sender and receiver
  - Schedule

CAN 26 2023 ; VUC CEA Seitech

FlexRay Basics

- Time Triggered protocol with a data rate up to 10 MBit/s
- 2 channels possible
- Payload up to 254 bytes
- Global time synchronization within whole FlexRay cluster
- Time synchronization must be achieved before data transmission starts
- Static segment
  - TDMA access (slots) with no arbitration
  - Fixed bandwidth allocation per ECU → null frames in case no data transmitted
- Optional dynamic segment
  - FTDMA (minislots) used for arbitration
  - Flexible bandwidth allocation → transmission only if necessary
- Wake up possible only though special FR wake up pattern

TDMA

Time Division Multiple Access

FTDMA

Flexible Time Division Multiple Access

CW 28 2023 ; VI-S CEA Seitech

FlexRay Basics

- Deterministic time behavior in static segment

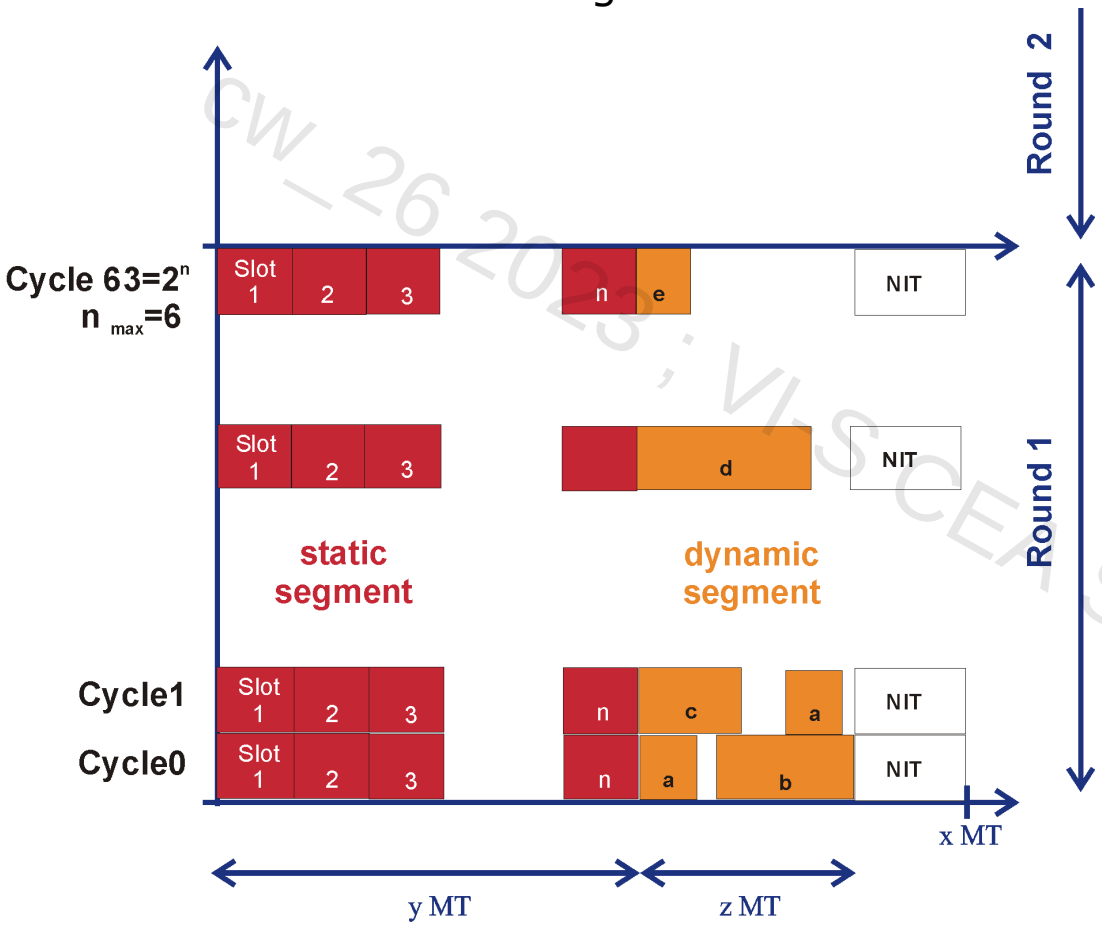

CW_26_2023 ; VI-S CER Seitech

Example: 1 Macrotick (MT) = 1 µsec
1 cycle = 5 msec

FlexRay Basics

- Priority controlled bus access in dynamic segment (like CAN)
- In case too many frames with higher priority: frame sent in a later cycle
- Transmission in dynamic segment only guaranteed for certain identifiers

cw_26 2023, VKS CEA Seitech

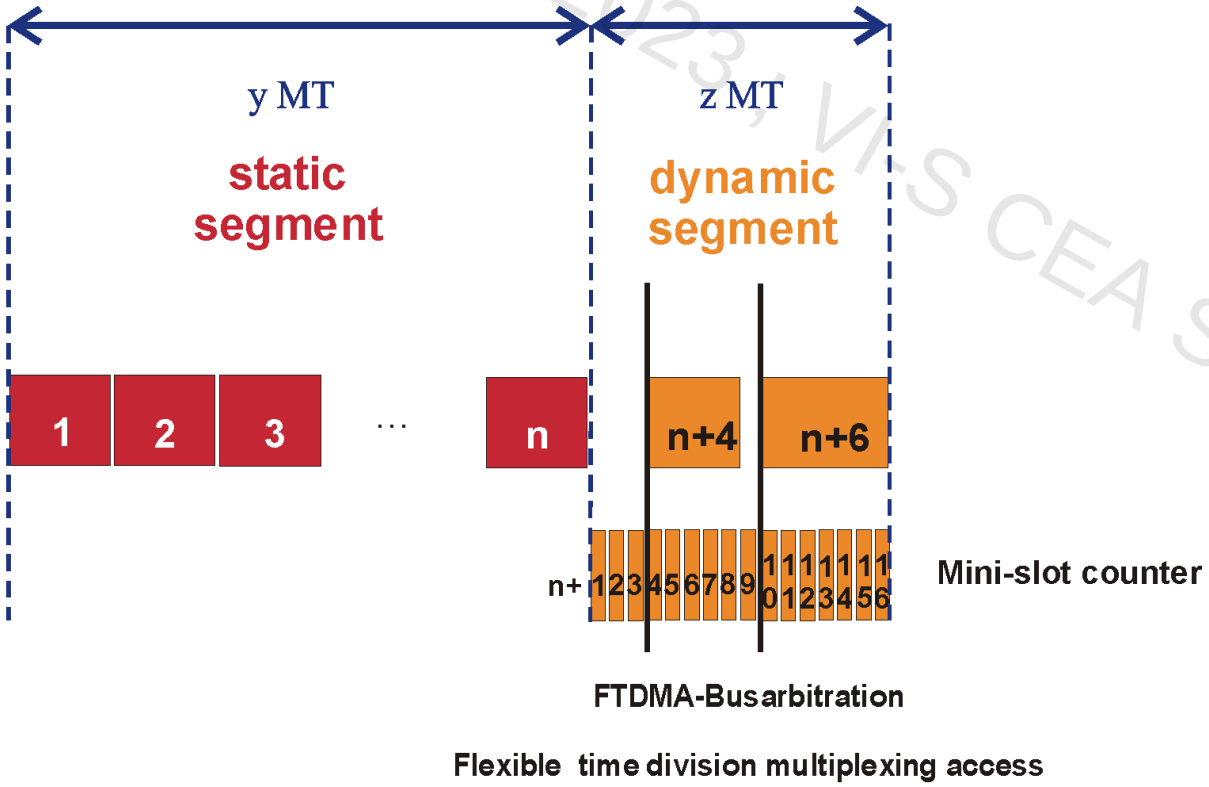

FlexRay Basics

- Reception and transmission are Time Triggered
- Synchronization of application components might be necessary
- Synchronization of BSW modules thanks to:
  - FR-Global Time (TP, NM, …)
  - FR-Timer (FrIf)

CW 26 2023 ; VI-S CEA Seitech

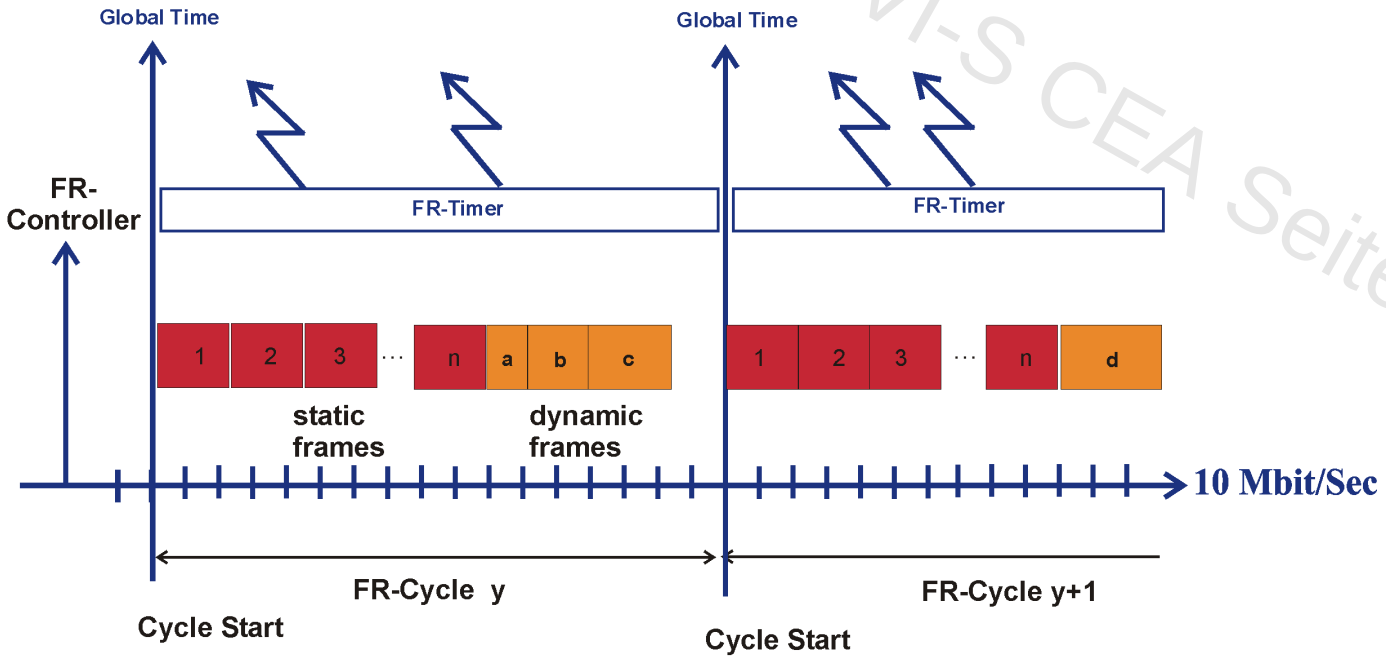

FlexRay Driver - General Description

Hardware abstraction providing:

- Initialization (based on ECU-configuration using FIBEX) and Control of Communication Controller (CC)
- Start of the FlexRay communication
- Message buffer access (sending and receiving frames)
- FR-Timer services and FlexRay Global Time access
- Interrupt handling (interrupt flags, interrupt handler)
- Error handling

No AUTOSAR main function (periodic function)

CW_26_2023, VI-S CEA Seitech

FlexRay Driver - Hardware Control

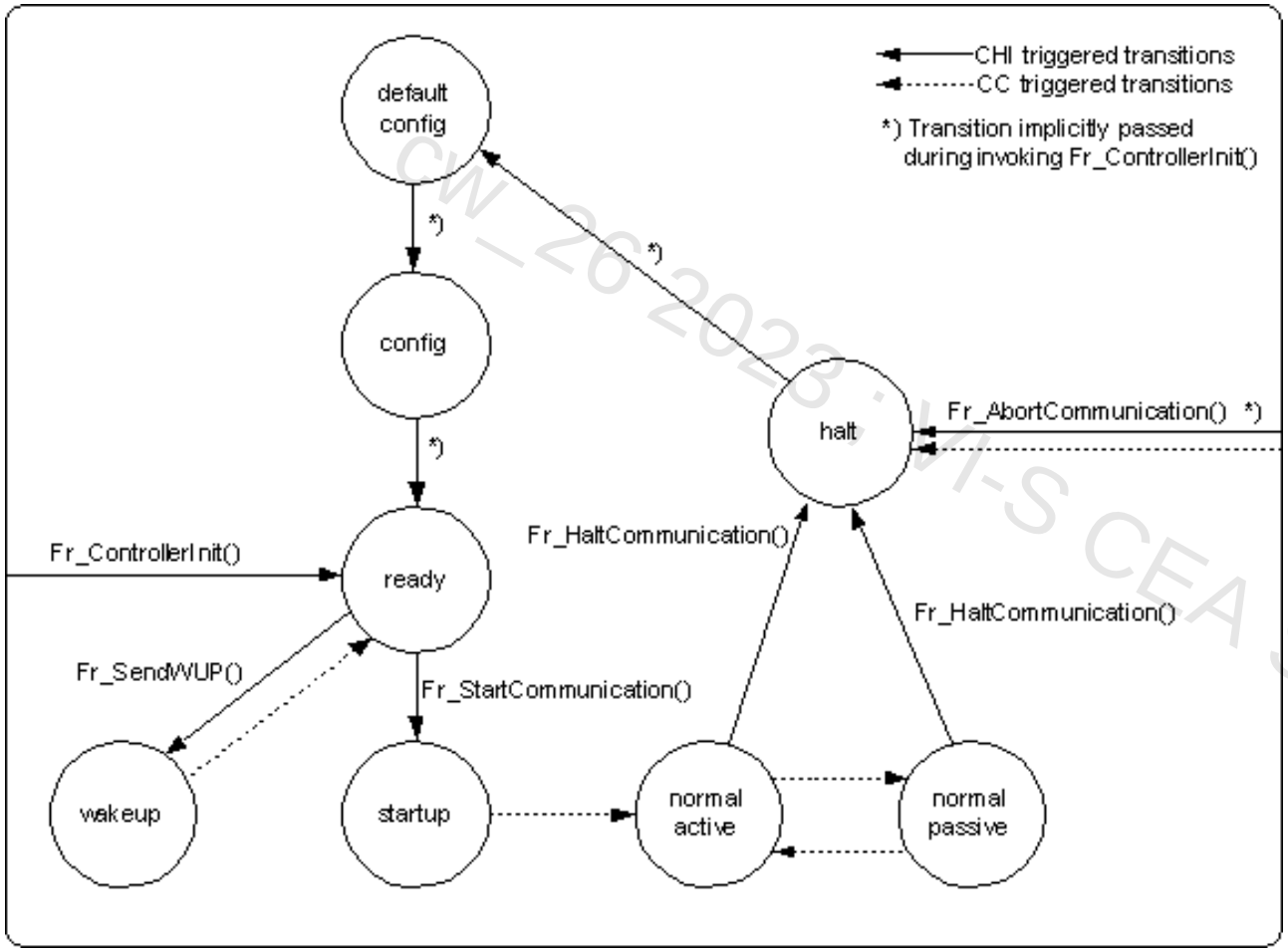

CC Status model

CW_26 2023 - VI-S CEA Seitech

FlexRay Interface - General Concepts

- Functionality
  - Abstracts the usage of multiple FlexRay communication controllers in an ECU
  - Provides a PDU based API for upper software layer modules
  - Uses a job-list for the execution of communication operations:
  - Assembles N-PDUs into frames (L-PDU) and gives them to Driver
  - Polls Driver for received frames (L-PDU) and disassembles them into N-PDUs
  - The job-list is directly scheduled by the FR-Timer (interrupt)

cw-28-2023 · VI-S CEA Seitech

FlexRay Interface - General Concepts

- Particularities
  - Reception: No polling possible - Active indication to upper layer via (XXX_RxIndication) callback
  - Transmission: Active retrieval of payload from upper layer possible via (XXX_TriggerTransmit) callback

- FIBEX (ASAM – Field Bus Exchange Format):
  - Contains FlexRay configuration information
  - Up to version 2.0.1 uses Signal Groups for PDU-definition

CW 26 2023, VI-S CEA Seitech

FlexRay Interface - General Concepts

- Job List Execution

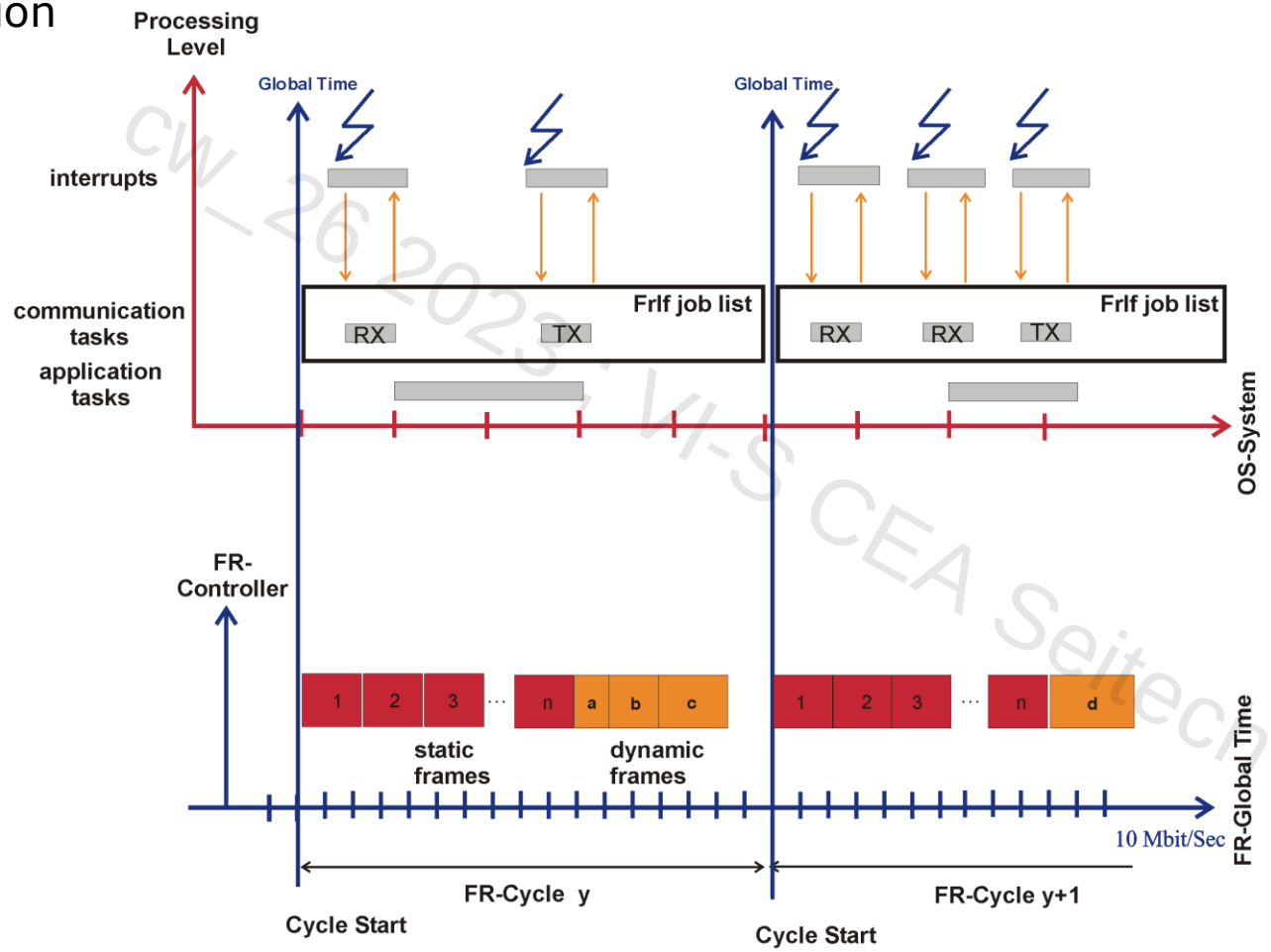

cw_26_2023_VI-S CEA Seitech

FlexRay Interface - Update Bits

All PDUs for which no transmission has been requested shall be marked within the Update Bits as invalid.

- Position of the Update Bits is not defined within FIBEX
- OEM-specific rules define position of the Update Bits in frame
- FrIf Update Bits are different from COM Update Bits!
- Only included in frame if decoupled transmission configured

CM_26_2023 ; VI-S CEA Saltech

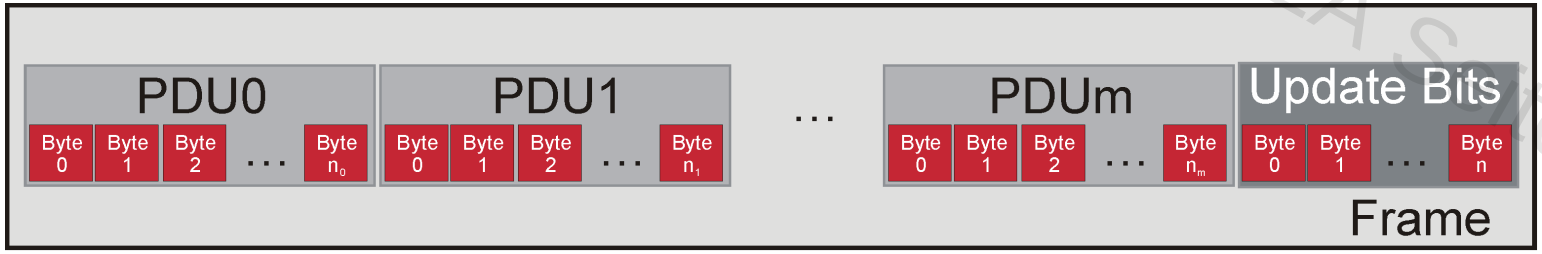

FlexRay Interface - Transmission modes

- **Decoupled** transmission

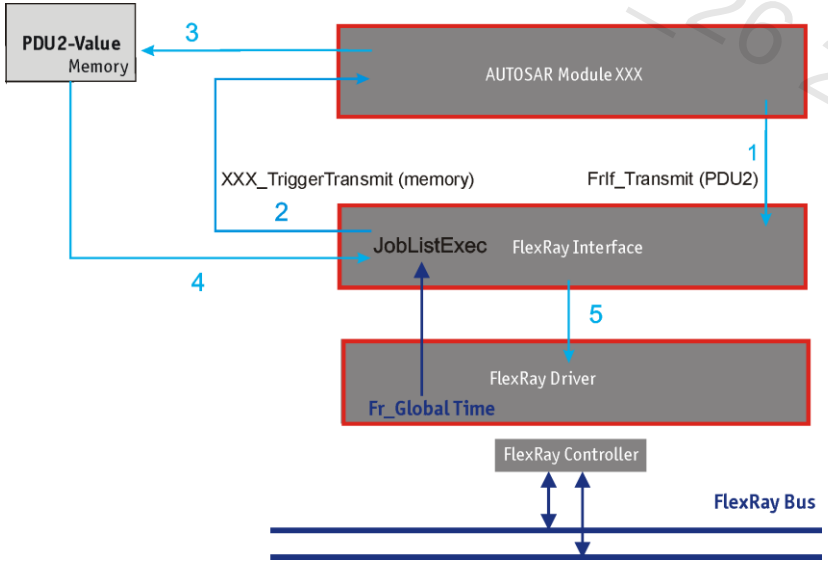

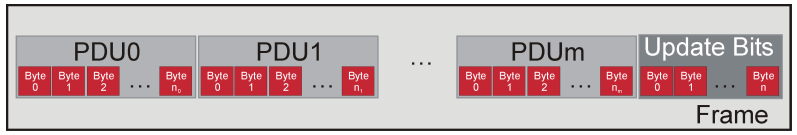

- Transmission with **immediate** buffer access (only possible if single PDU / Frame)

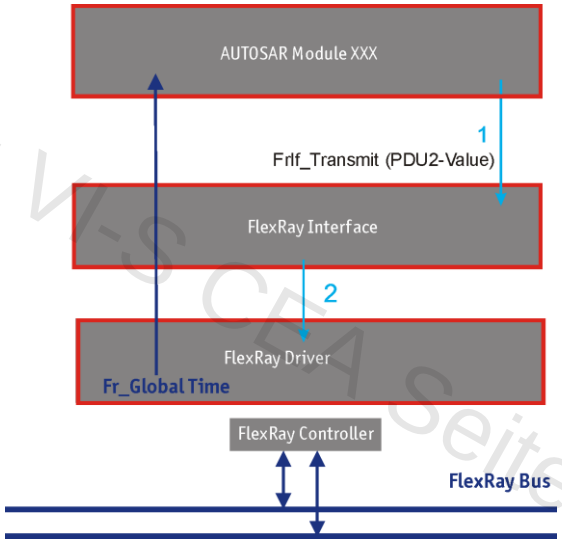

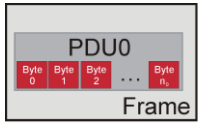

cw_26 2023 ; VI-SCEA Seitech

FlexRay Transport Protocol - General Concepts

The AUTOSAR FrTp can be configured compatible to ISO 15765-2.

It basically provides the following additional services:

- Max. payload length of 4 GByte
- Segmentation of data in max. 254 Byte-PDUs (configurable)
- Variable transport frame length depending on PDU-Type:

  Rx-Frame / Tx-Frame / FlowControl-Frame
- Different acknowledgement types possible:

  None / ACK / ACK-RT
- Retry in case of error and transmit cancellation
- Immediate or decoupled transmission

CW 10 2023 VI-S CEA Seitech

FlexRay Transport Protocol - General Concepts

- AUTOSAR does not allow for dynamic payload length change during Run-Time.
- Transport frames can be transmitted in static or dynamic segment.
- Advantage of dynamic segment:
  - Transport frame length is independent of the application frame length.
  - Guaranteed dynamic transmission, if total frame length is in accordance to max. dynamic segment length. For instance if 40 % of one 5 msec-cycle shall be reserved for the dynamic segment:
    - Example 1 (Flash-PDU): 4 guaranteed dynamic transport frames à 254 Bytes

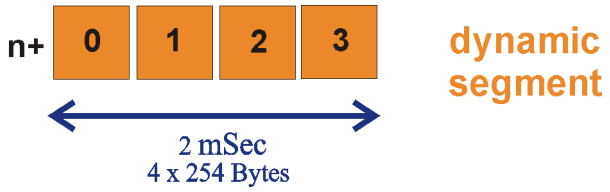

- Example 2 (Diagnostic-PDU): 31 guaranteed dynamic transport frames à 32 Bytes

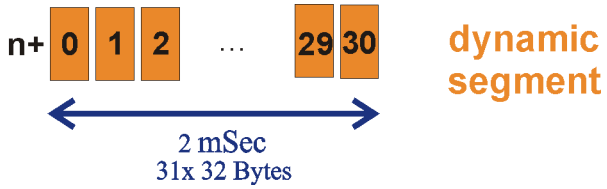

CW_26_2023_VAS CEA Seitech

FlexRay Transport Protocol - Channel & Connection

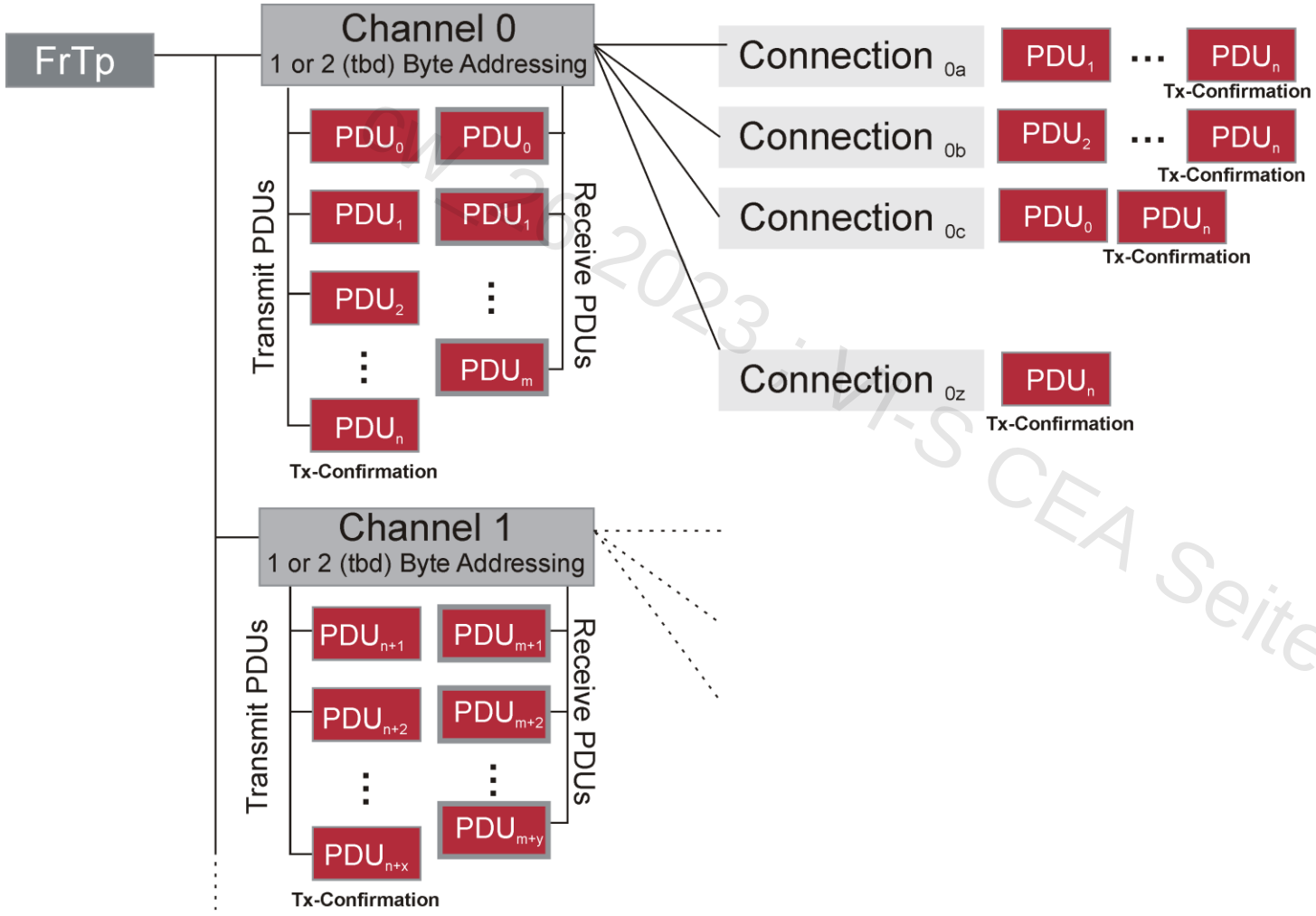

CW 25 2023 : V-S CEA Seitech

FlexRay Transport Protocol - Addressing Modes

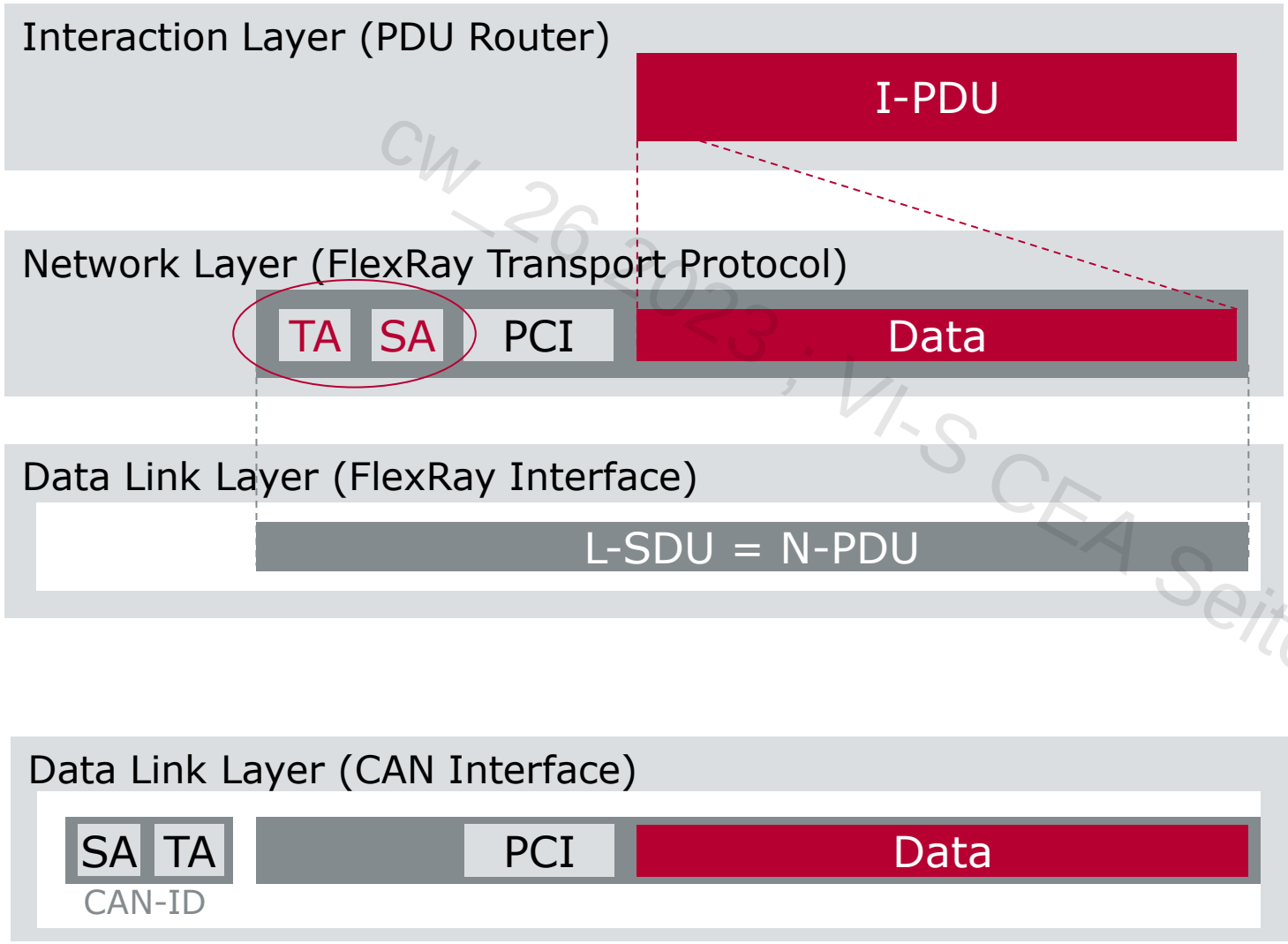

cw_26_2023, VI-S CEA Seitech

Wakeup and Sleep

Wakeup

- When the bus driver receives the wakeup pattern from the FlexRay bus, this activates the entire FlexRay ECU.

- An ECU runs through the states up to **Ready**, beginning from **Sleep Mode**. Afterwards, it is ready for communication, but is not yet synchronized.

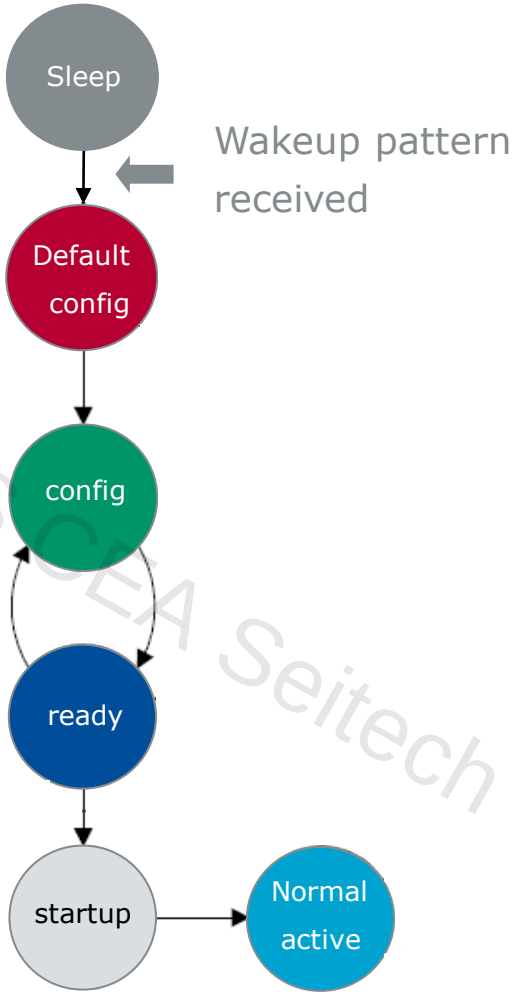

Source: Protocol specification 2.1 A

JW_26 2023 VI-SCEA Seitech

Wakeup and Sleep - Synchronization

State change of the ECU

(Ready → Normal Active)

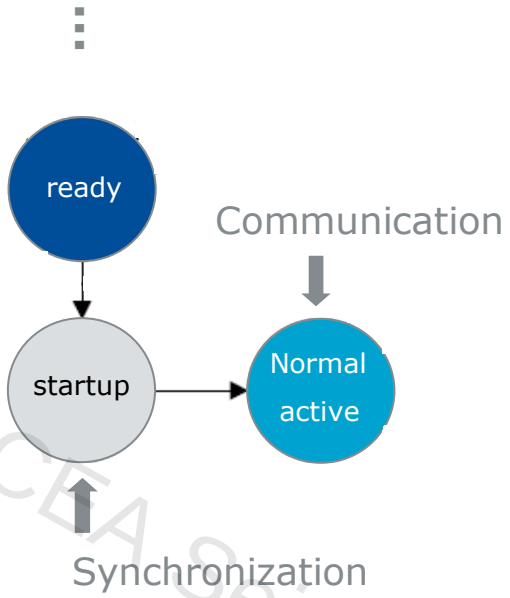

- In Startup Mode certain ECUs begin with synchronization.
- These ECUs are referred to as Coldstart nodes, and they send out FlexRay frames with activated indicator bits:
  - Startup bit → Frame used as Startup Frame
  - Sync bit → Frame used as Sync Frame
- A leading coldstart node and a following coldstart node together form the communication cycle to which other ECUs without coldstart capability synchronize.

cw 28 2023 i.V. S CEA Seitech

Wakeup and Sleep - Synchronization

Once all ECUs have reached the Ready mode after the wakeup process, it is possible to begin with synchronization (startup). Startup is executed by a macro; when it ends, this signifies the beginning of normal communication (normal active). There must be at least two ECUs in the FlexRay network that are coldstart capable. A coldstart refers to triggering of the startup macro, by which synchronization is produced. ECUs with coldstart capability are called coldstart nodes.

In the startup phase, the communication cycle is initially executed with the frames of the leading coldstart node and is then supplemented by the frames of the following coldstart node. The frames that are used for this are characterized by special indicator bits that are specific to the startup and sync frames. These frames are sent synchronously on both FlexRay channels. After the end of startup, the startup bit is cleared and the sync bit remains for continuous synchronization.

CW 26 2023 ; VI-S CEA Seitech

Wakeup and Sleep

Sleep

- FrNm only supports shut down
- All nodes switch off simultaneously
- VOTE: marks a node that needs the bus
  - Decrement of a counter for all cycles

cw. 26 2023 ; VI-S CEA Seitech

- Applications
  1. DoIP (Diagnostics over IP, ISO 13400)
  2. Communication Backbone
- Fitted into the AUTOSAR stack below the PDUR

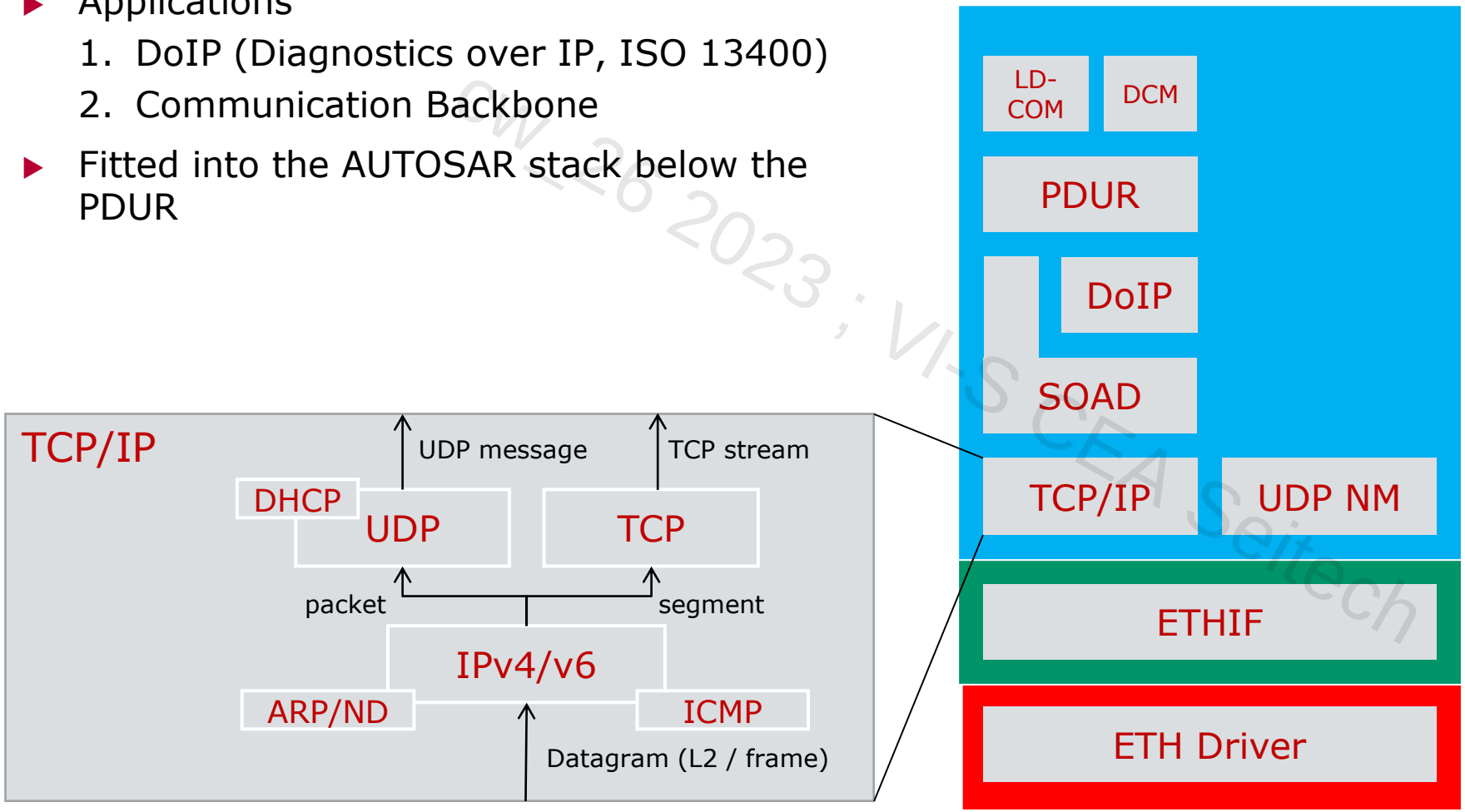

cw_26 2023 ; VI-S CEA Seitech

DHCP: Dynamic Host Configuration Protocol acc. To RFC 2131. DHCP allows to dynamically give an address to clients without manual configuration.

ARP: Address Resolution Protocol, used in IPv4 to retrieve a MAC Addresses suitable to a given IP address on the local network. It uses a broadcast for this.

ND: Neighbor Discovery Protocol (NDP), used in IPv6, replaces ARP. It works in a local network. If a node is not reachable on the local network, it determines the router to take.

ICMP: Internet Control Message Protocol, Status and diagnostics regarding the LAN Status, e.g. TTL.

UDP: User Datagram Protocol (Layer 4)

TCP: Transmission Control Protocol (Layer 4)

IP: Internet Protocol (Layer 3)

CW 26 2023, VI-S CEA Seitech

Software Components

Memory Abstraction

cw_26 2023 VI-S CEA Seitech