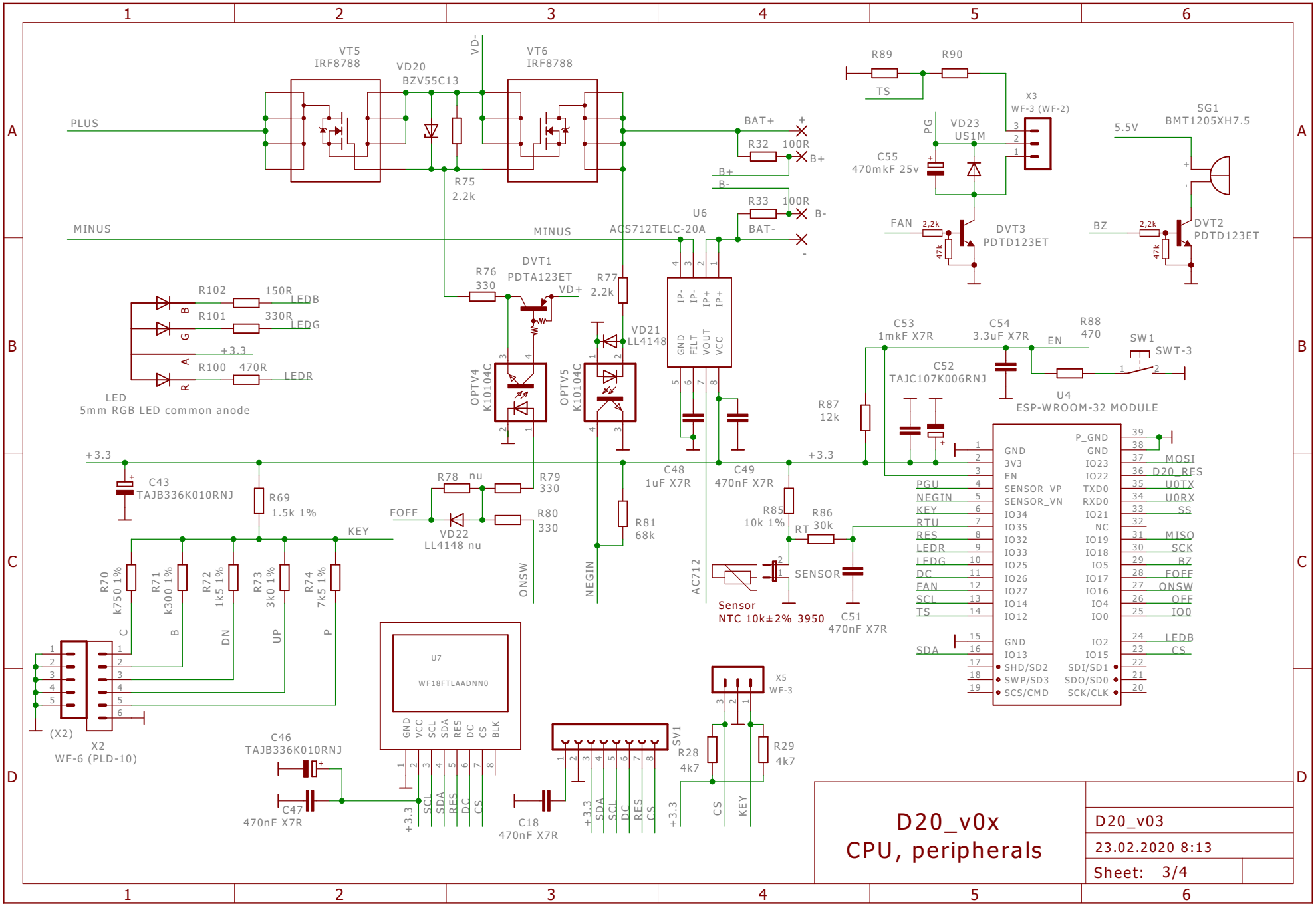
VT5
IRF8788
VD20
BZV55C13
VD-
VT6
IRF8788
PLUS
MINUS
R75
2.2k
BAT+
R32
100R
B+
B-
R33
100R
B-
BAT-
U6
ACS712TELC-20A
R89
R90
TS
X3
WF-3 (WF-2)
PG
VD23
US1M
C55
470mkF 25v
FAN
2,2k
47k
DVT3
PDTD123ET
5.5V
SG1
BMT1205XH7.5
BZ
2,2k
47k
DVT2
PDTD123ET
R102
150R
LEDB
R101
330R
LEDG
+3.3
R100
470R
LEDR
LED
5mm RGB LED common anode
R76
330
DVT1
PDTA123ET
VD+
R77
2.2k
VD21
LL4148
OPTV4
K10104C
OPTV5
K10104C
IP-
IP-
IP+
IP+
GND
FILT
VOUT
VCC
C53
1mkF X7R
C54
3.3uF X7R
EN
R88
470
SW1
SWT-3
C52
TAJC107K006RNJ
U4
ESP-WROOM-32 MODULE
R87
12k
+3.3
C43
TAJB336K010RNJ
R69
1.5k 1%
R78
nu
R79
330
FOFF
VD22
LL4148 nu
R80
330
KEY
ONSW
NEGIN
R81
68k
C48
1uF X7R
C49
470nF X7R
R85
10k 1%
R86
30k
RT
SENSOR
Sensor
NTC 10k±2% 3950
C51
470nF X7R
AC712
PGU
NEGIN
KEY
RTU
RES
LEDR
LEDG
DC
FAN
SCL
TS
SDA
GND
3V3
EN
SENSOR_VP
SENSOR_VN
IO34
IO35
IO32
IO33
IO25
IO26
IO27
IO14
IO12
GND
IO13
SHD/SD2
SWP/SD3
SCS/CMD
P_GND
GND
IO23
IO22
TXD0
RXD0
IO21
NC
IO19
IO18
IO5
IO17
IO16
IO4
IO0
IO2
IO15
SDI/SD1
SDO/SD0
SCK/CLK
MOSI
D20_RES
U0TX
U0RX
SS
MISO
SCK
BZ
FOFF
ONSW
OFF
IO0
LEDB
CS
R70
k750 1%
R71
k300 1%
R72
1k5 1%
R73
3k0 1%
R74
7k5 1%
C
B
DN
UP
P
(X2)
X2
WF-6 (PLD-10)
U7
WF18FTLAADNN0
GND
VCC
SCL
SDA
RES
DC
CS
BLK
C46
TAJB336K010RNJ
C47
470nF X7R
C18
470nF X7R
SV1
X5
WF-3
R28
4k7
R29
4k7
CS
KEY
D20_v0x
CPU, peripherals
D20_v03
23.02.2020 8:13
Sheet: 3/4