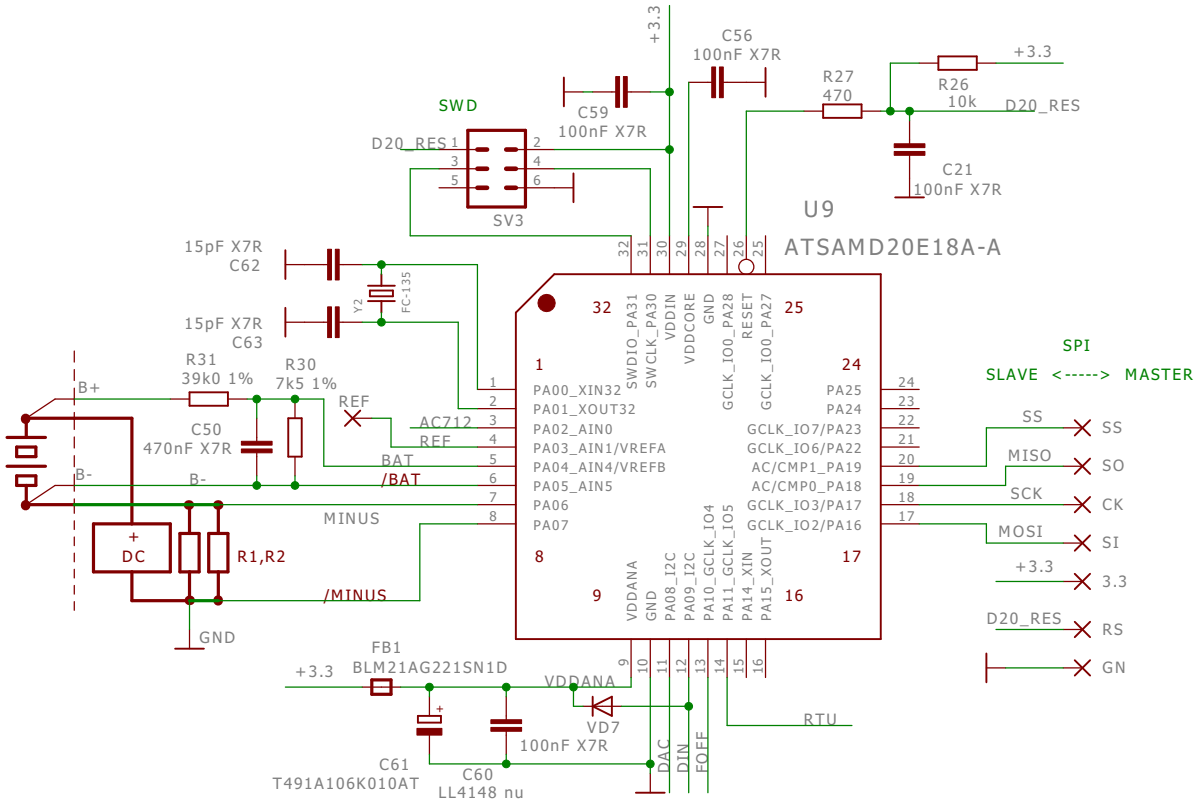

D20_v0x Driver	D20_v15
	29.02.2020 9:57
	Sheet: 4/4