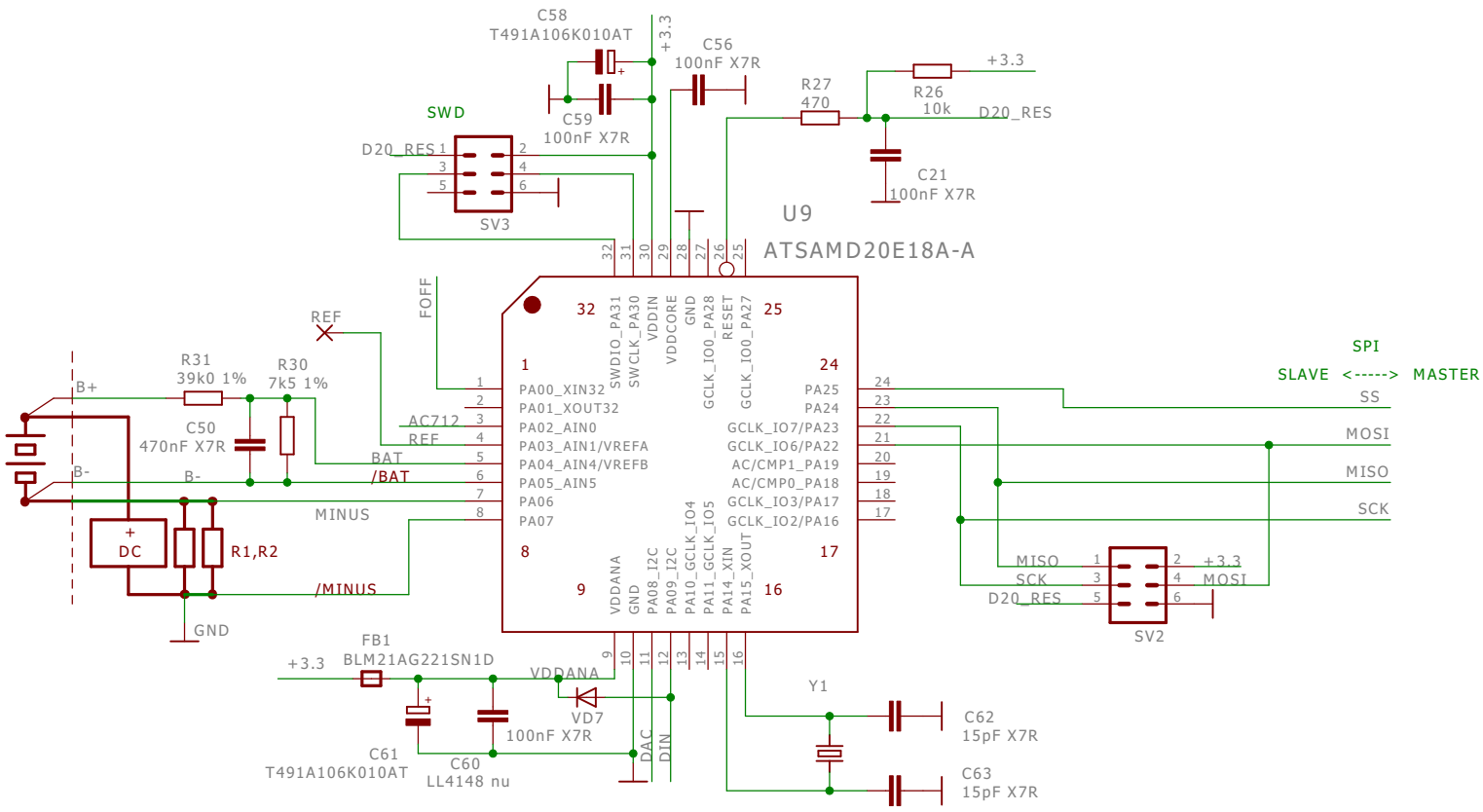

D20_v0x Driver

D20_v05

27.02.2020 8:33

Sheet: 4/4