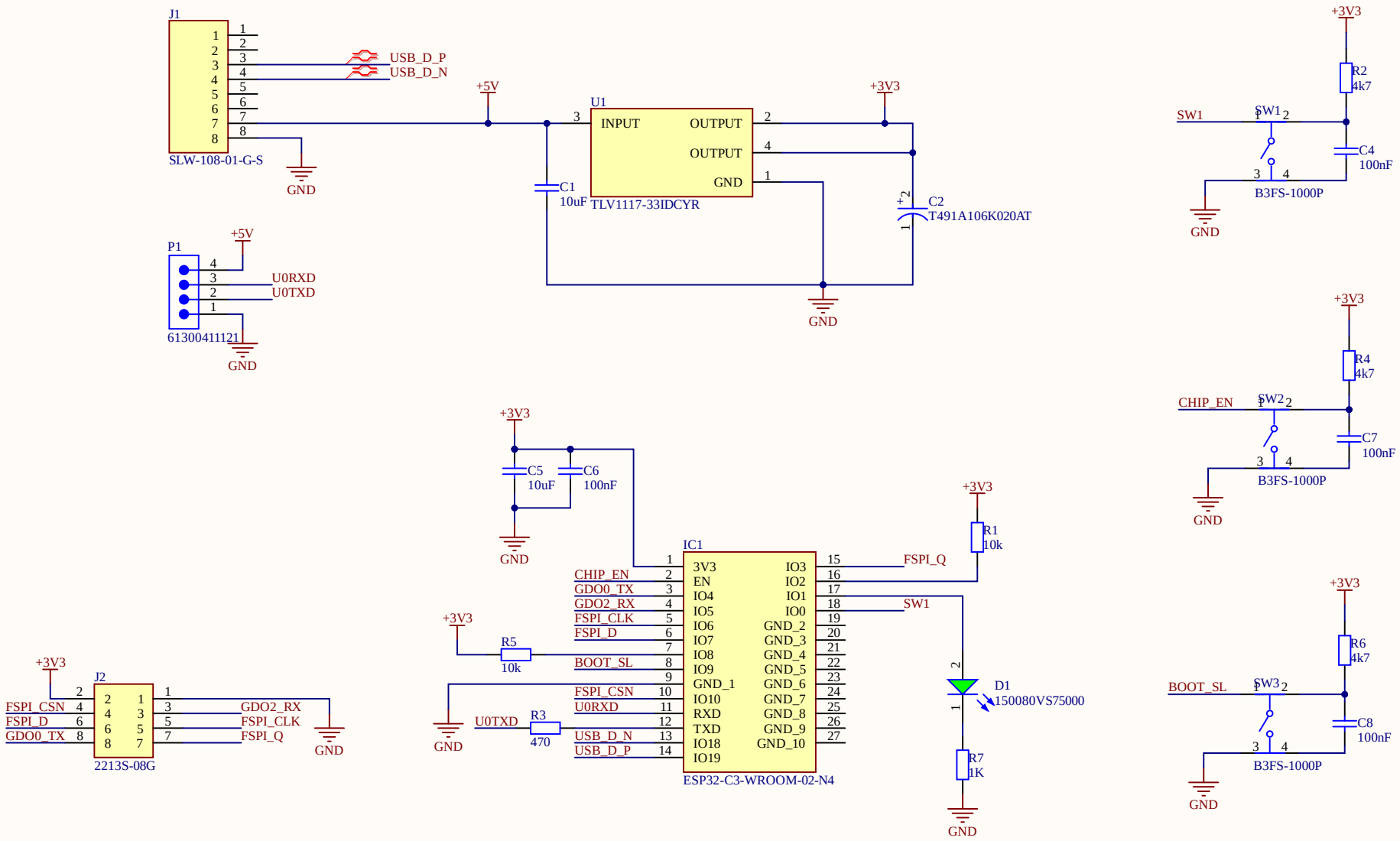

PCB Gateway			Revision: 1.6	*Hogeschool Windesheim*
Size: A4	Date: 26-12-2023	Drawn by: Niels Boer	Sheet 1 of 1	*Campus 2-6* *Postbus 10090* *8000GB, Zwolle*

hogeschool Windesheim

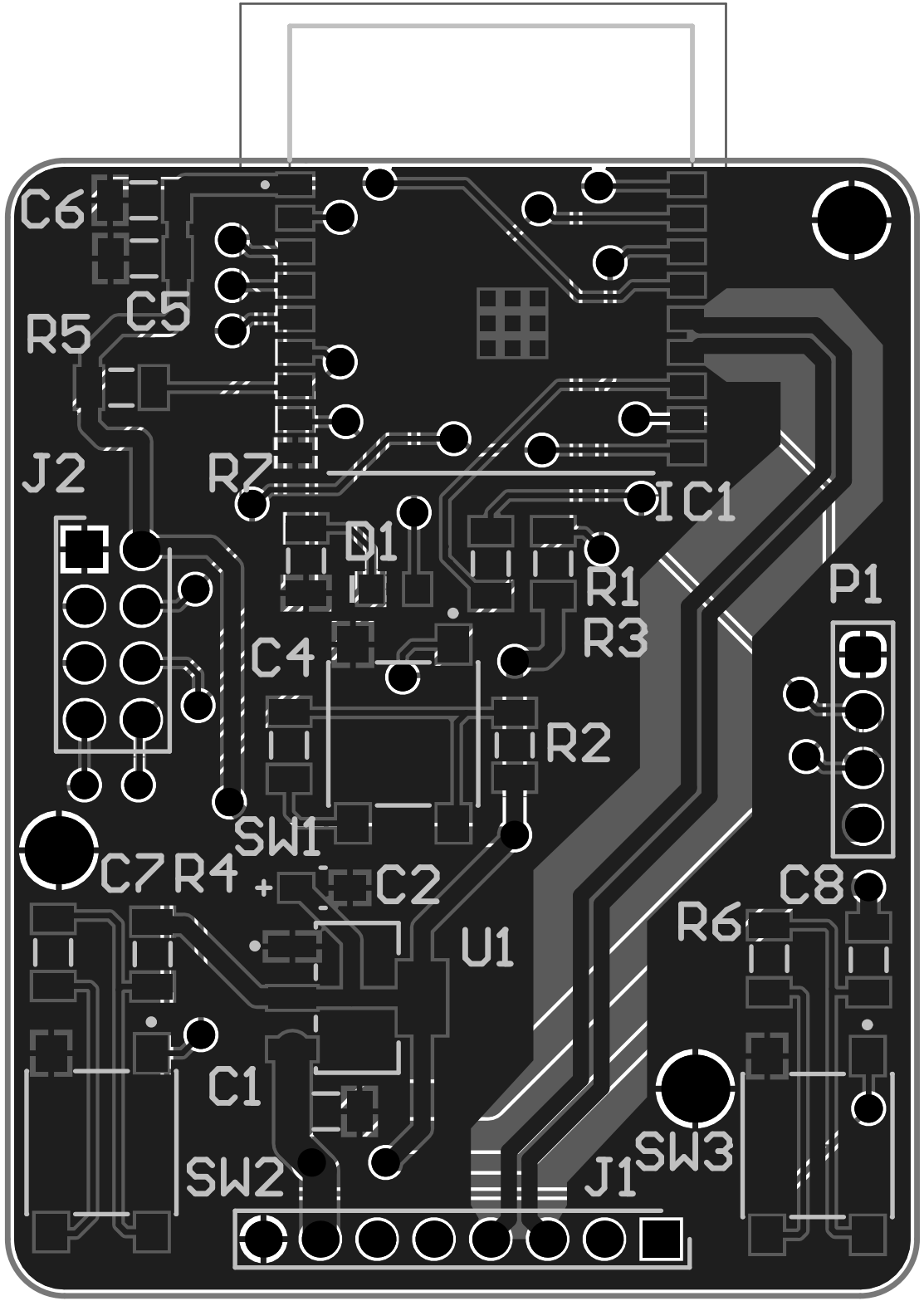
C6
C5
R5
J2
R7
D1
IC1
R1
R3
P1
C4
R2
SW1
C7
R4
C2
U1
R6
C8
C1
SW2
J1
SW3