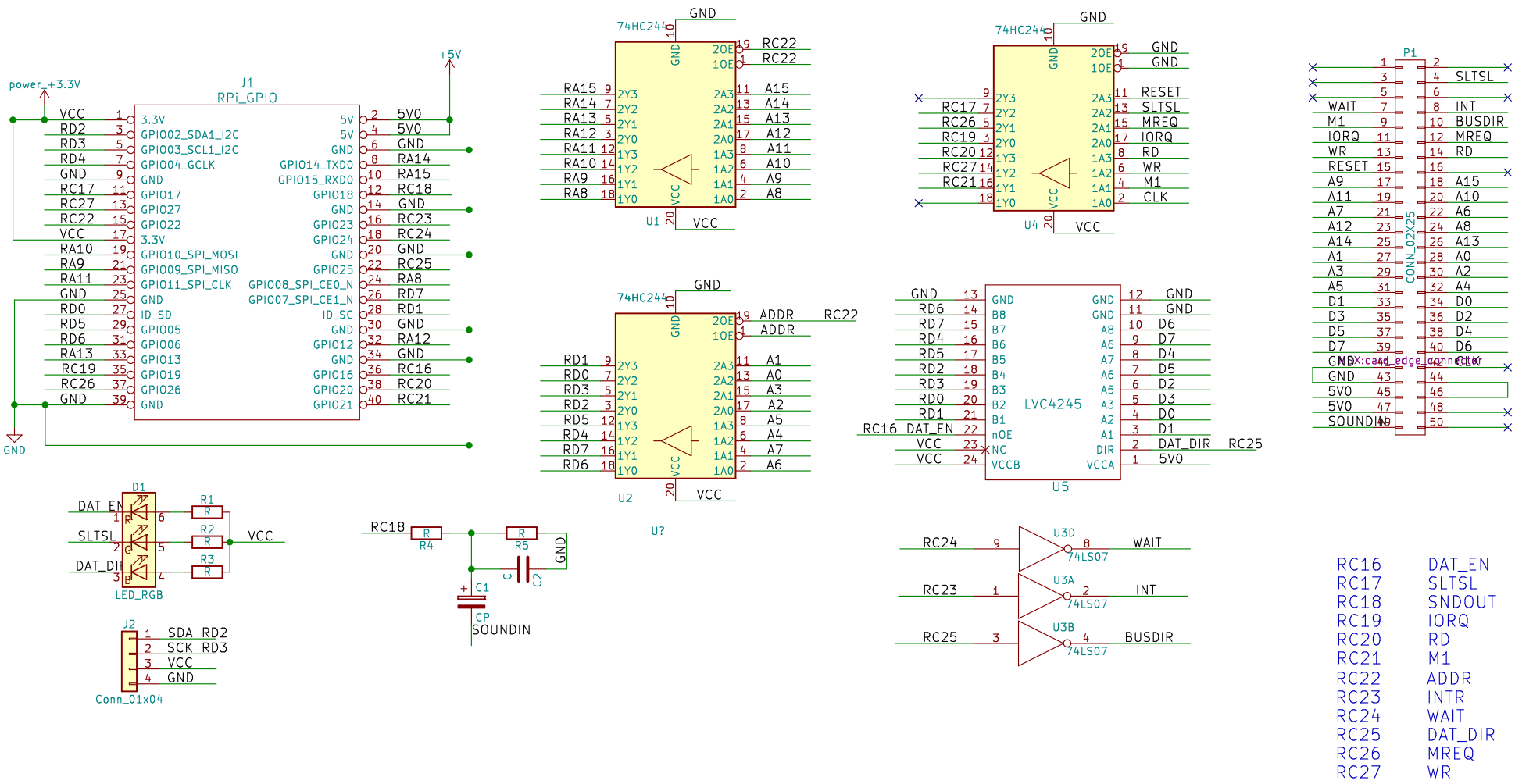

Sheet:1/1
File: rpmpv1.sch

Title: RPMP V1.9 only with 74LVC4245 and some logics

Size: A4	Date: 2020.1.12	Rev:
KiCad E.D.A. kicad 4.0.7		Id: 1/1