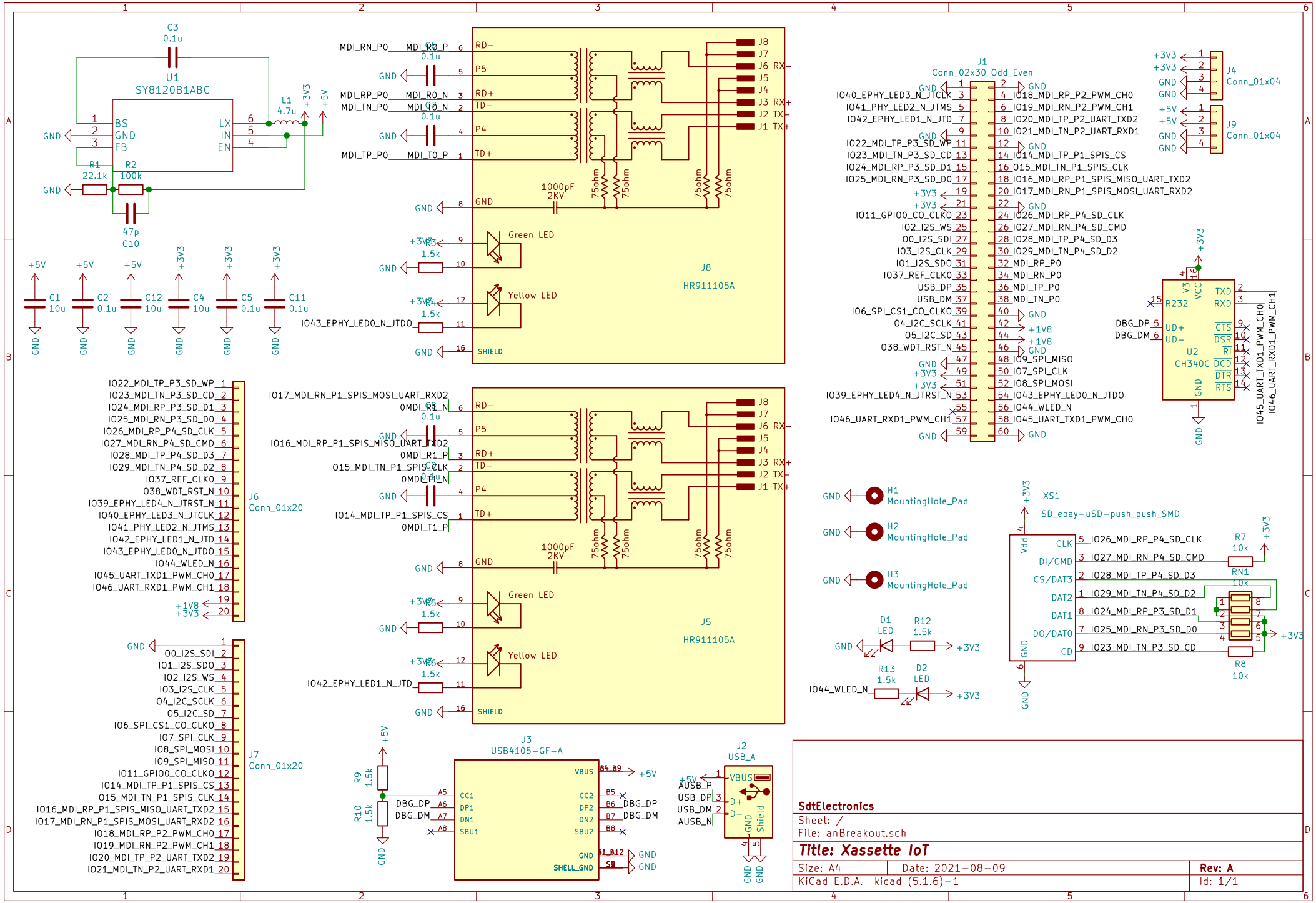

SdtElectronics

Sheet: /

File: anBreakout.sch

Title: Xassette IoT

Size: A4	Date: 2021-08-09	Rev: A
KiCad E.D.A. kicad (5.1.6)-1		Id: 1/1