Bangladesh University of Engineering & Technology

Course No: EEE 414
Course Name: Electrical Service Design

Project Title : Electrical Design on Seven-Storeyed Building

Date of Submission: 02/03/2023

Group: 03

Project By
1706040- Habibullah Khan
1706041- Deb. Indronil Sajib
1706042- Md Monirul Islam
1706044- Shuvro chowdhury
1706051- Sariha Noor azad
1706055- Adib Md Ridwan

Section: A2

FLOOR PLAN(Ground Floor)

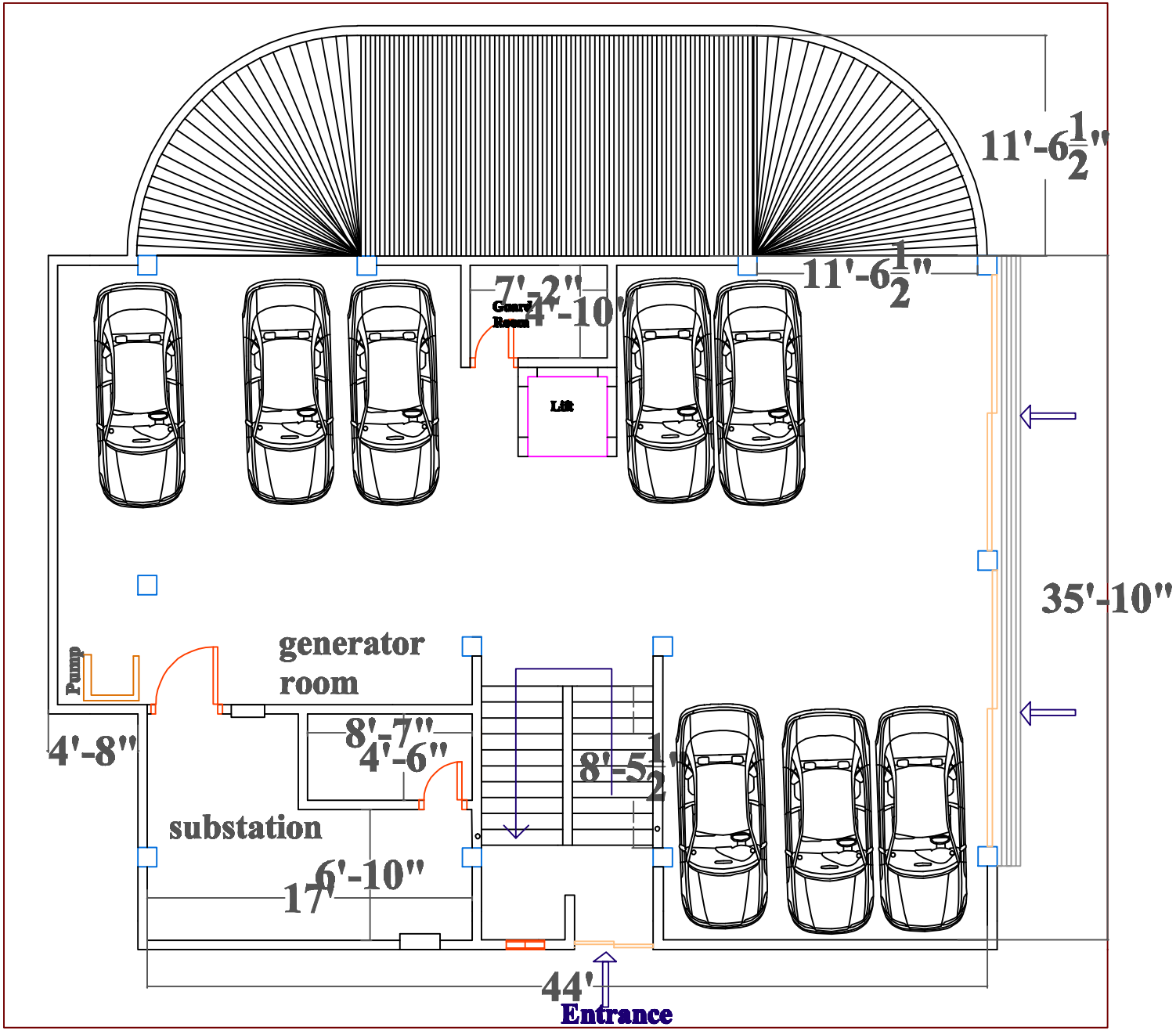

FLOOR PLAN(First & second Floor)

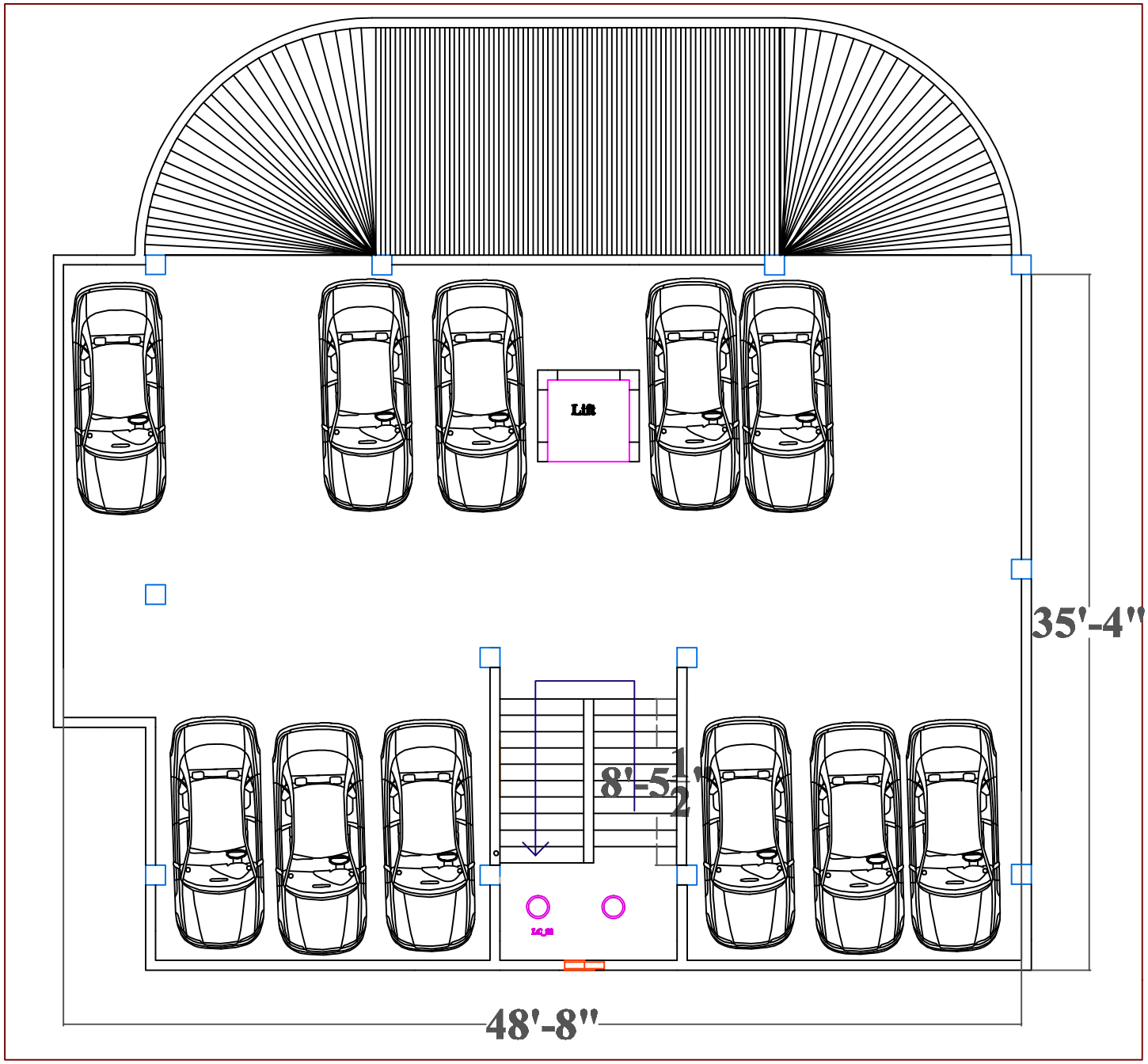

FLOOR PLAN(Third above Floors)

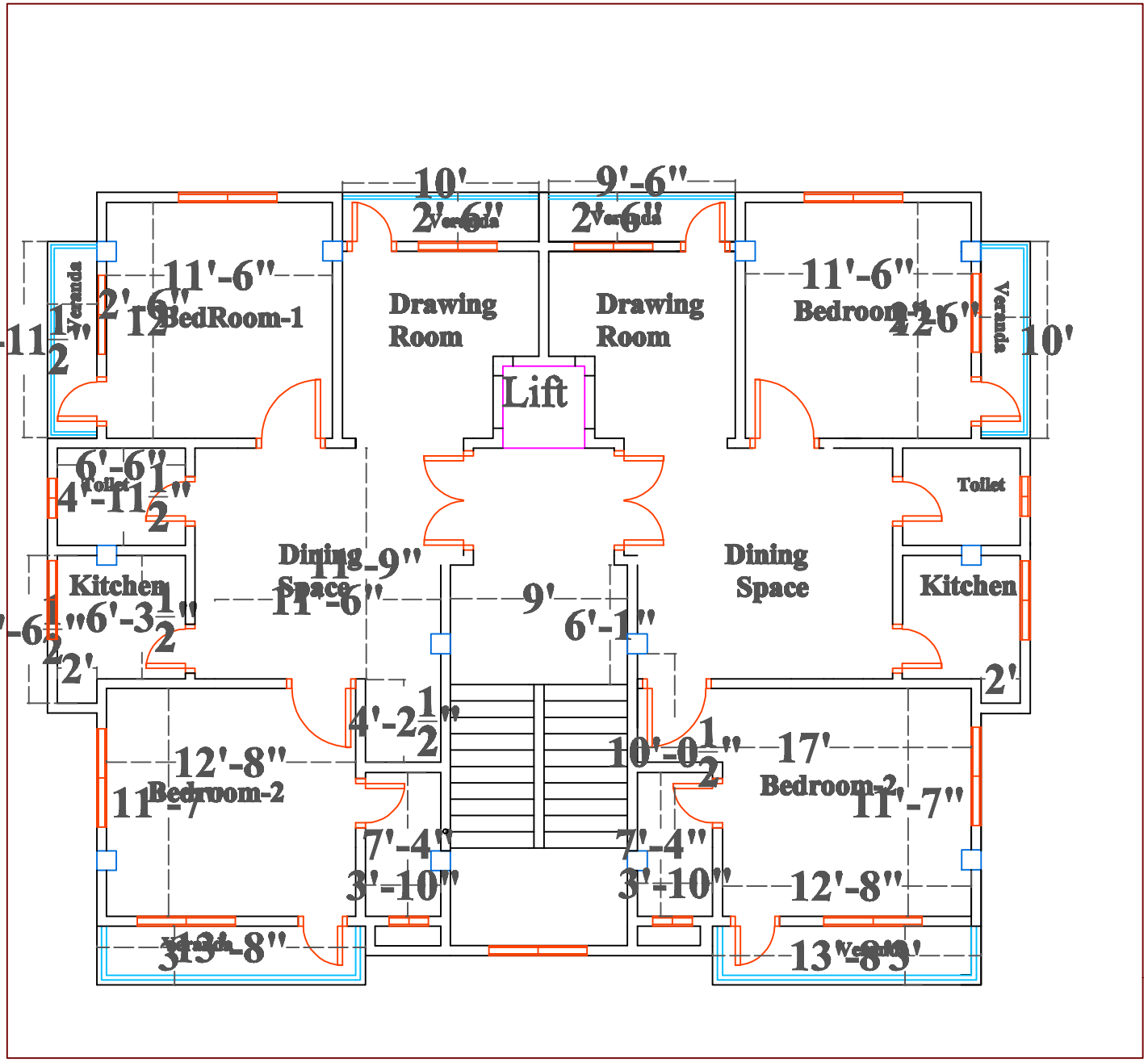

Fittings and Fixture(Ground Floor)

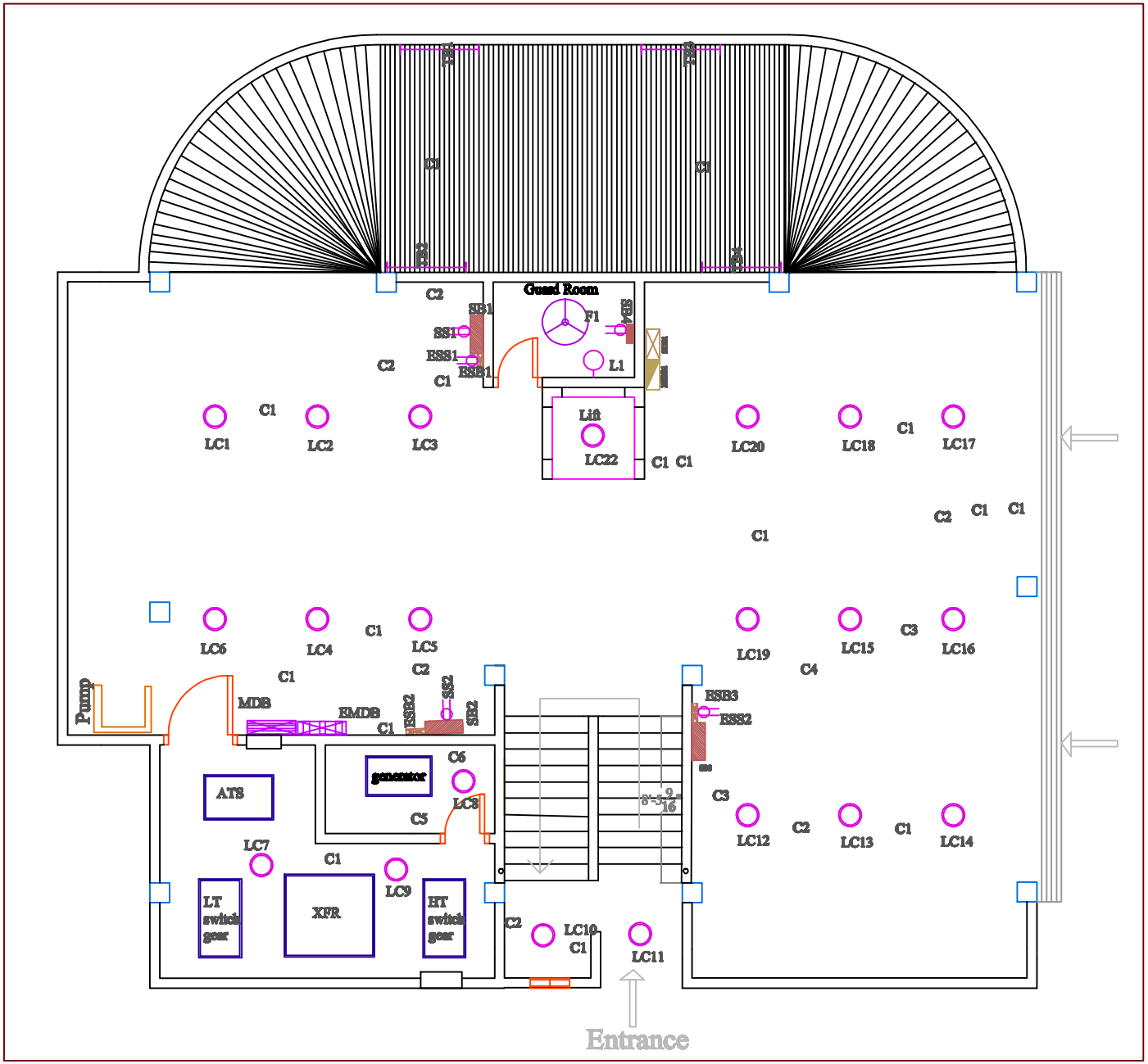

Fittings & Fixture(First & second Floor)

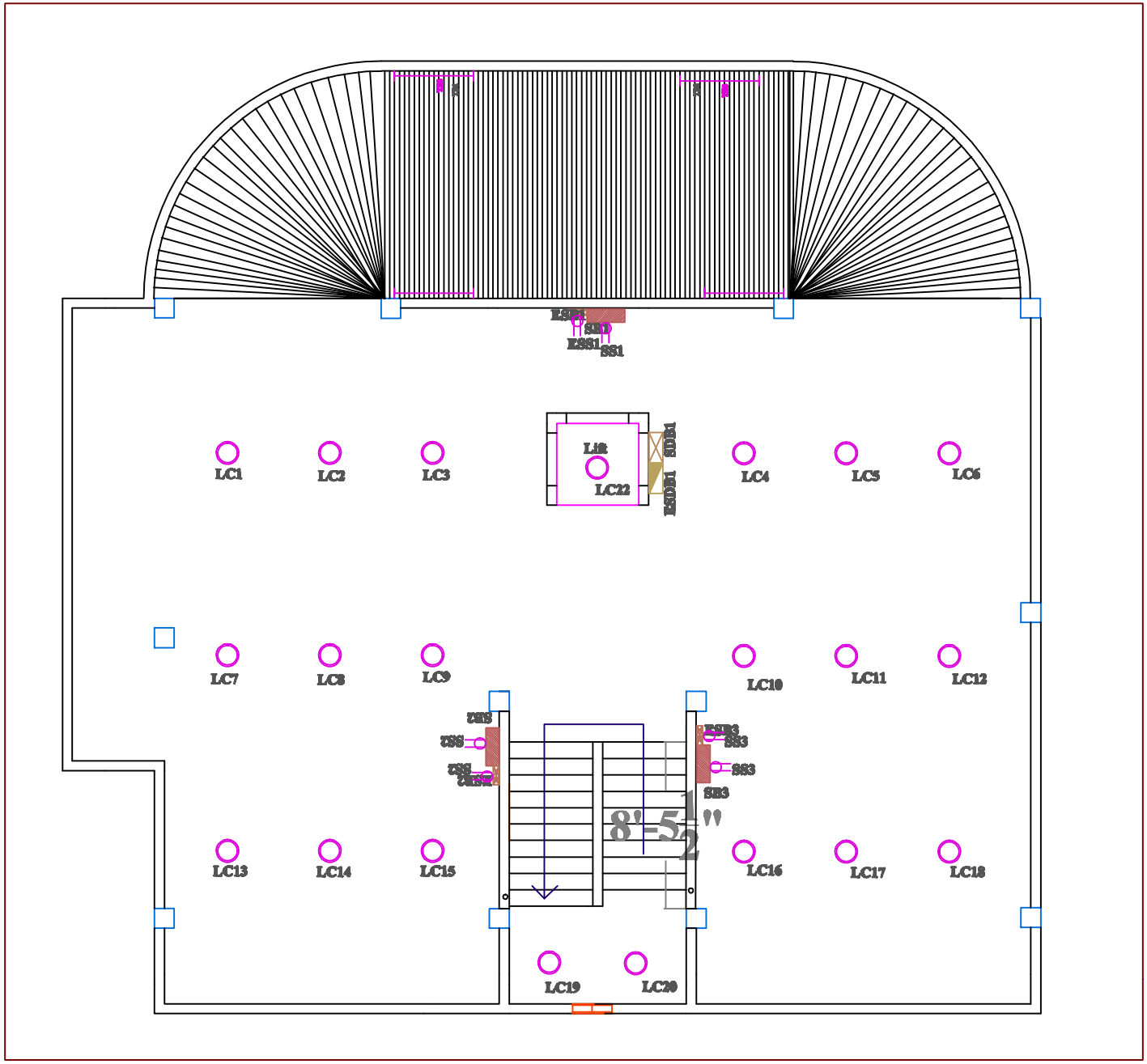

Fittings & Fixture(Third & above Floors)

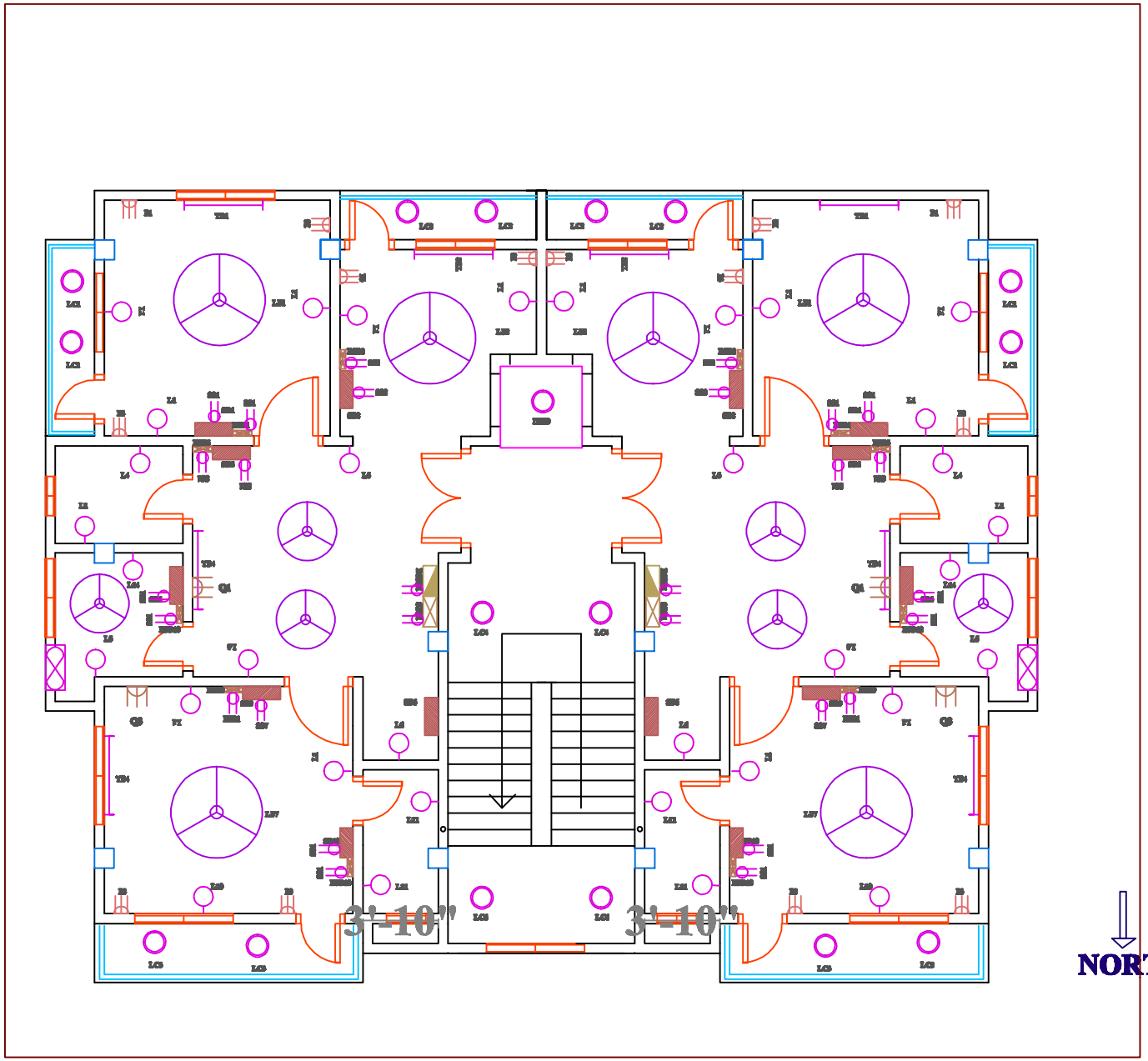

Conduit Layout(Ground Floor)

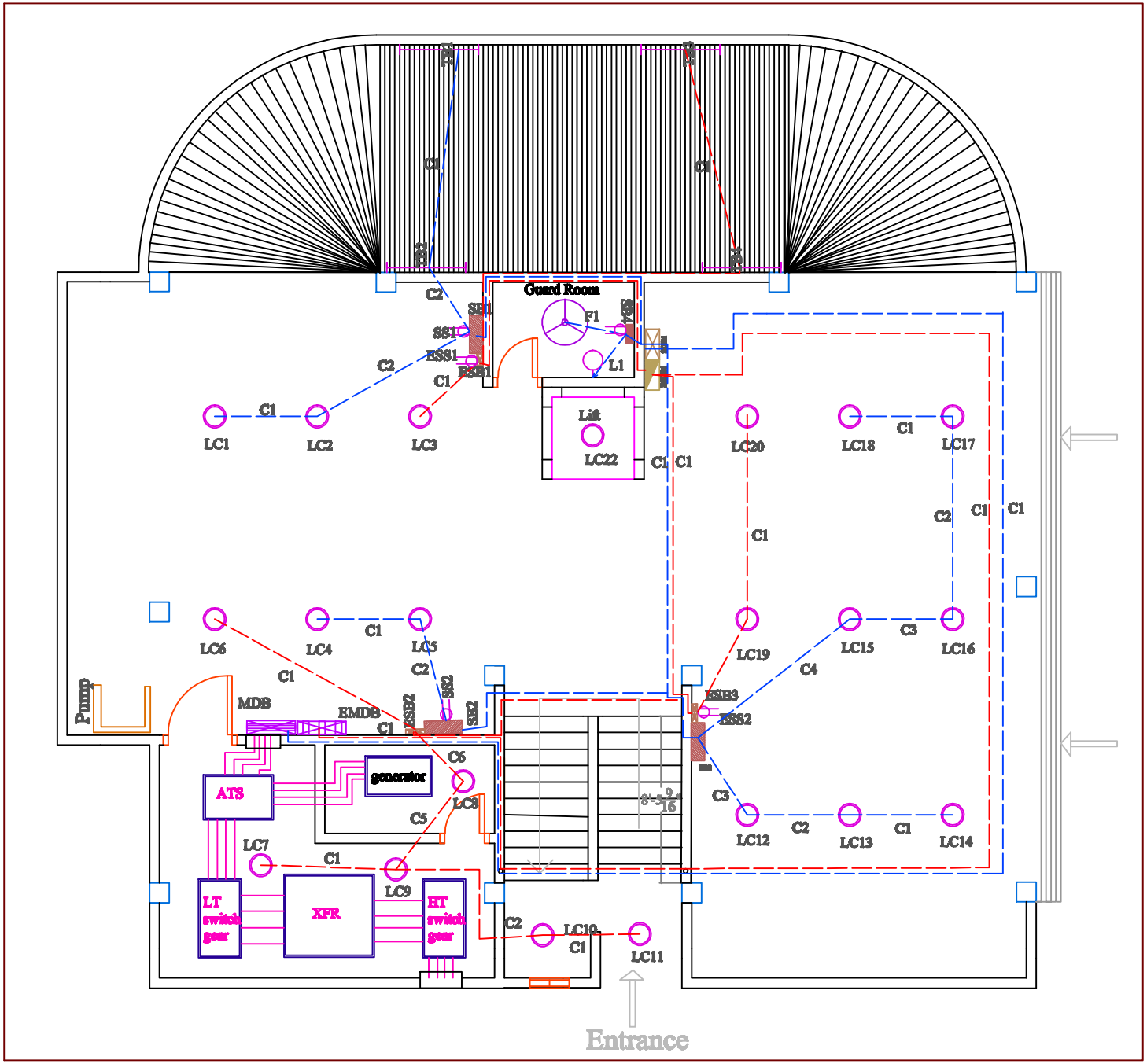

Conduit Layout(First & second Floor)

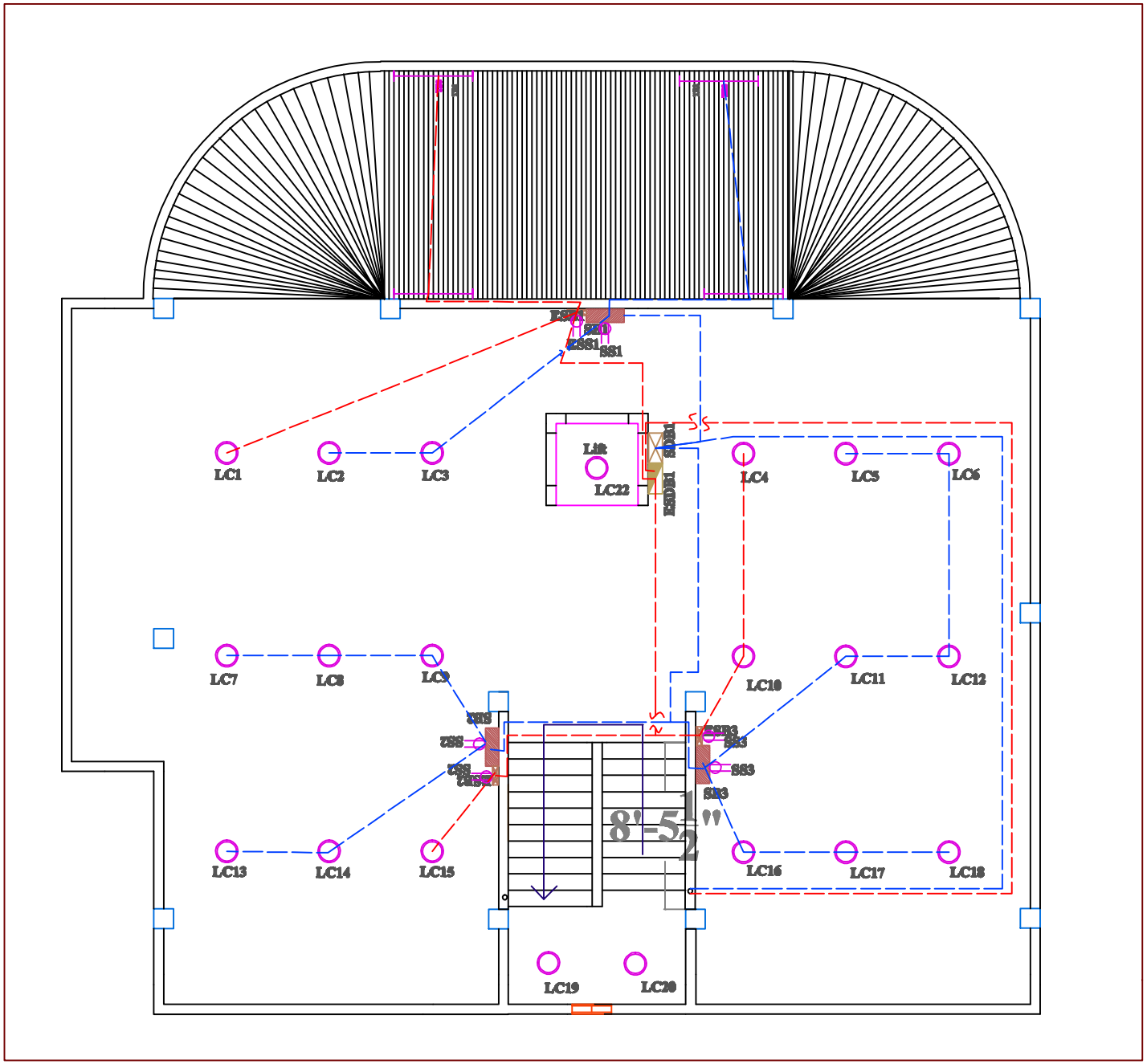

Conduit Layout(Third & above Floors)

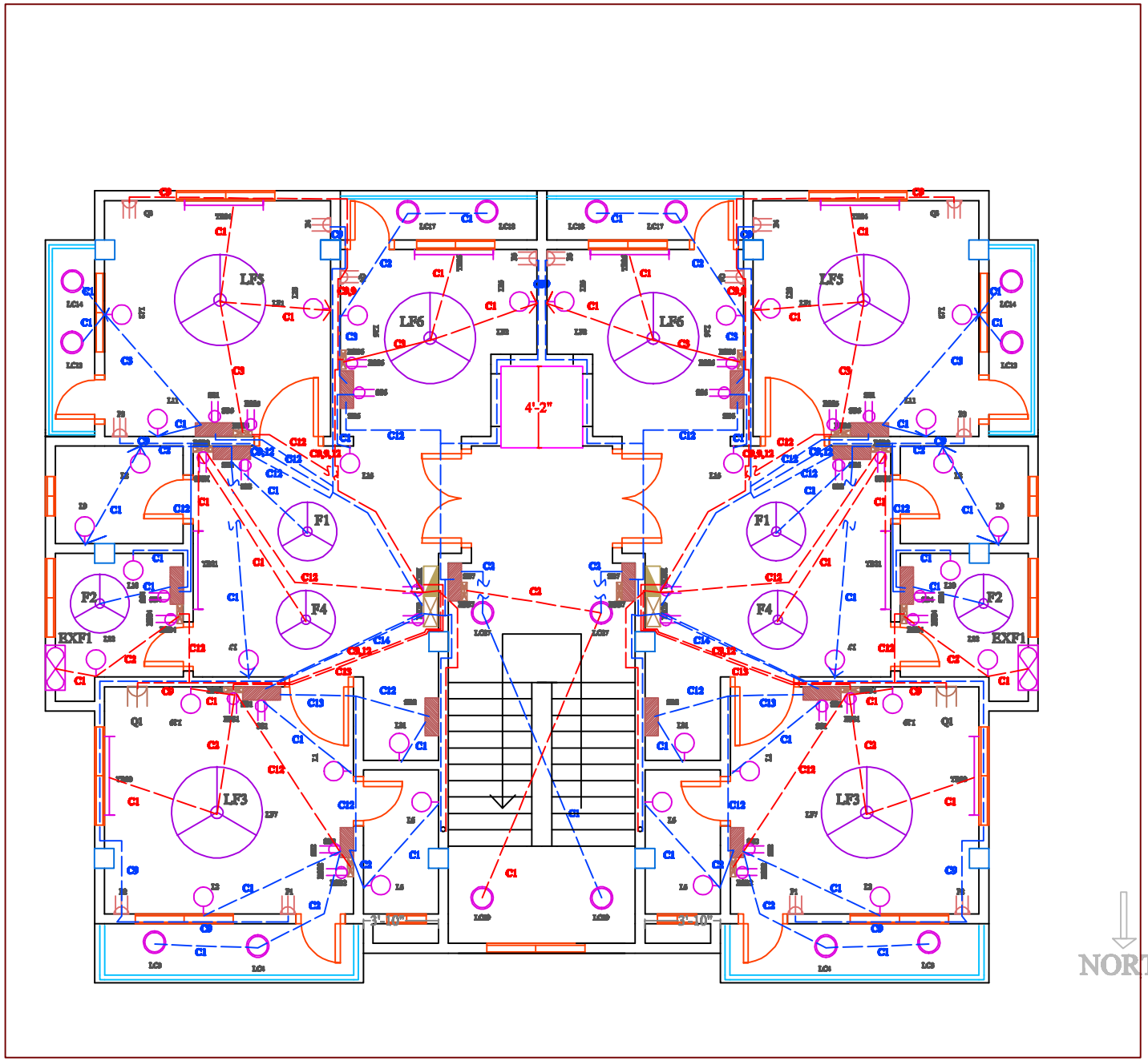

Conduit for TV,TP,DT

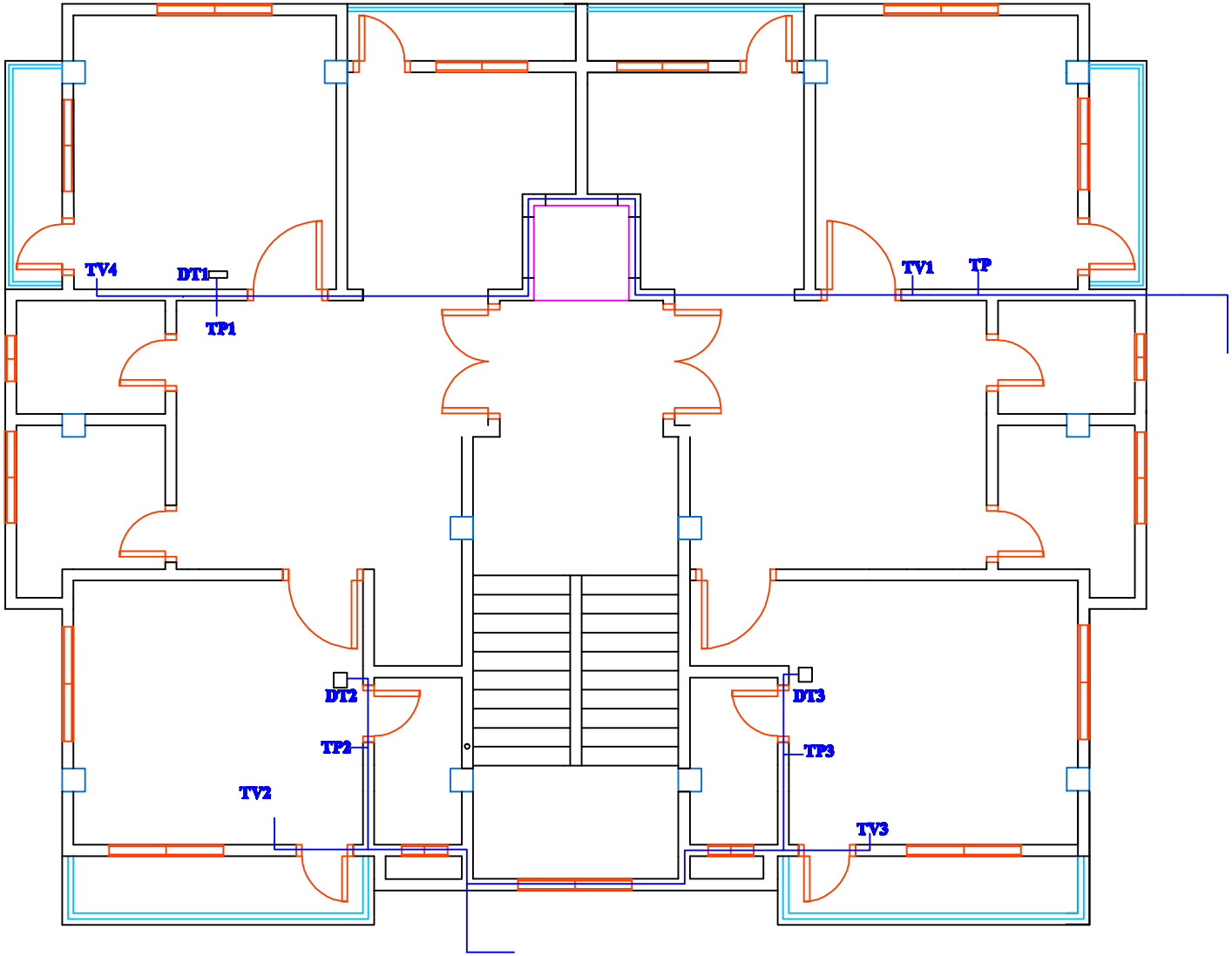

Lightning Protection system

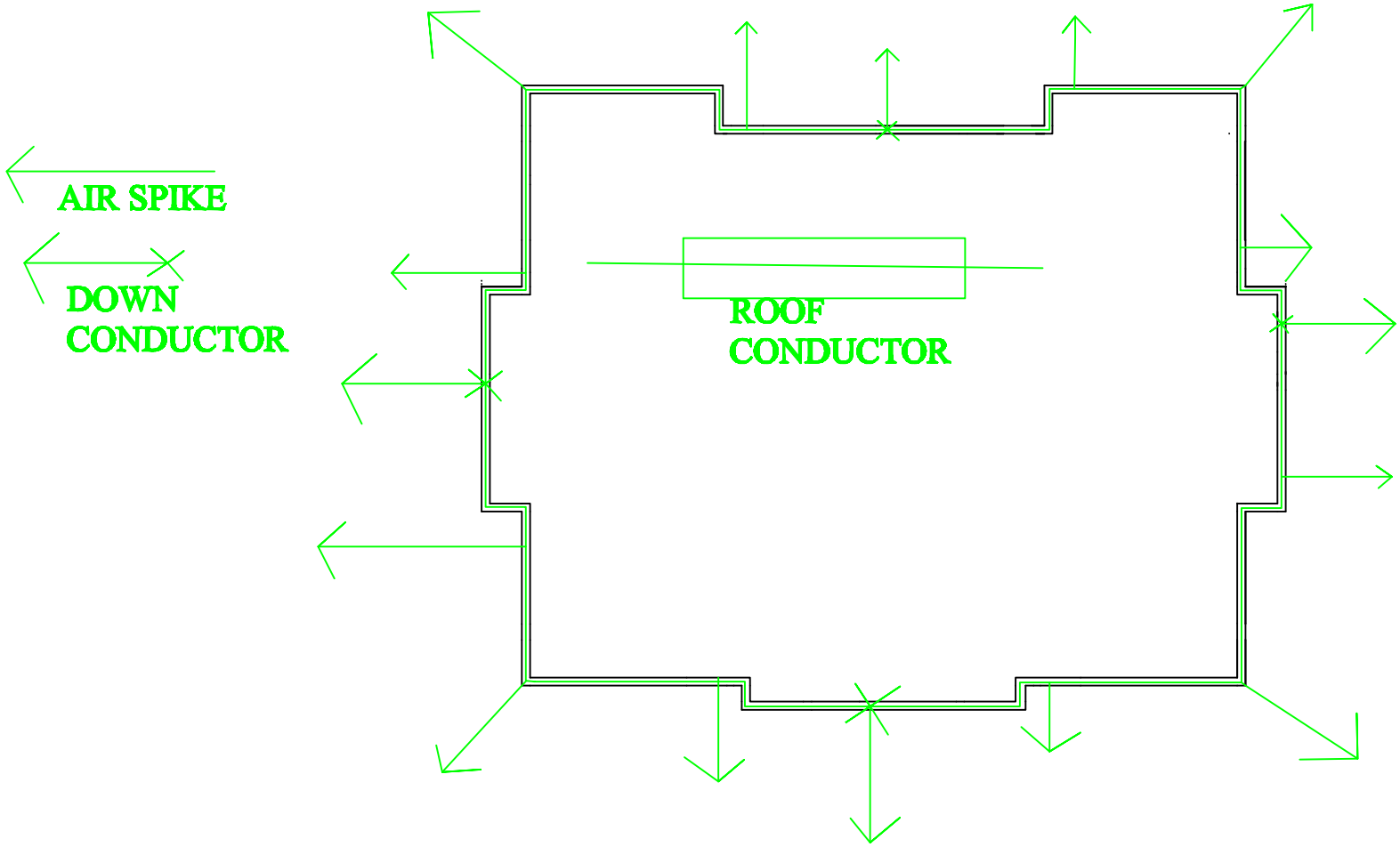

Calculations:

- Light Bulbs and Fans :
  - Ground floor(substation):
    - Lights:
      - Illuminance ,E = 150 lux
      - Area , A = (6.6 * 16.01) sq-ft = 105.666 sq-ft = 105.666/10.76 m^2 = 9.82 m^2
      - Lumen of the light bulbs (10 Watt LED bulb), F = 1250 lm
      - Light loss factor* Utilization factor = LLF * UF = 0.75
      - Number of lights per illuminare, n=1
      - Number of light bulbs required = N
      - So, E = $\frac{n \times N \times F \times LLF \times UF}{A}$ => N = $\frac{E \times A}{n \times F \times LLF \times UF}$ = $\frac{150 \times 9.82}{1 \times 1250 \times 0.75}$ = 1.5712 ≈ 2

  - Ground floor(Garage):
    - Lights:
      - Illuminance ,E = 100 lux
      - Area , A = (17.01 * 35.1+ 22.8*17.01) sq-ft = 984.528 sq-ft = 983.528/10.76 m^2 = 91.5m^2
      - Lumen of the light bulbs (10 Watt LED bulb), F = 1250 lm
      - Light loss factor* Utilization factor = LLF * UF = 0.75
      - Number of lights per illuminare, n=1
      - Number of light bulbs required = N
      - So, E = $\frac{n \times N \times F \times LLF \times UF}{A}$ => N = $\frac{E \times A}{n \times F \times LLF \times UF}$ = $\frac{100 \times 91.5}{1 \times 1250 \times 0.75}$ = 9.76 ≈ 10

  - First & Second floor (Garage):
    - Lights:
      - Illuminance ,E = 100 lux
      - Area , A = (43.8 * 34.6) sq-ft = 1515.48 sq-ft = 1515.48/10.76 m^2 = 140.84 m^2
      - Lumen of the light bulbs (10 Watt LED bulb), F = 1250 lm
      - Light loss factor* Utilization factor = LLF * UF = 0.75
      - Number of lights per illuminare, n=1
      - Number of light bulbs required = N
      - So, E = $\frac{n \times N \times F \times LLF \times UF}{A}$ => N = $\frac{E \times A}{n \times F \times LLF \times UF}$ = $\frac{100 \times 140.84}{1 \times 1250 \times 0.75}$ = 15.02 ≈ 16

- 3rd & typical floor per unit (Bedroom1):
  - LED Lights:
    - Illuminance of Drawing room , E = 200 lux
    - Area , A = (12.005 * 11.5) sq-ft = 138.0575 sq-ft = 138.0575/10.76 m^2 = 12.83 m^2
    - Lumen of the light bulbs (10 Watt LED bulb), F = 1250 lm
    - Light loss factor* Utilization factor = LLF * UF = 0.75
    - Number of lights per illuminare, n=1
    - Number of light bulbs required = N
    - So, E = $\frac{n \times N \times F \times LLF \times UF}{A}$ => N = $\frac{E \times A}{n \times F \times LLF \times UF}$ = $\frac{200 \times 12.83}{1 \times 1250 \times 0.75}$ = 2.737 ≈ 3
  - Tubelights (for both normal & emergency case) :
    - Illuminance of Drawing room , E = 200 lux
    - Area , A = (12.005 * 11.5) sq-ft = 138.0575 sq-ft = 138.0575/10.76 m^2 = 12.83 m^2
    - Lumen of the tubelight (20 Watt tubelight), F = 1800 lm
    - Light loss factor* Utilization factor = LLF * UF = 0.75
    - Number of lights per illuminare, n=1
    - Number of light bulbs required = N
    - So, E = $\frac{n \times N \times F \times LLF \times UF}{A}$ => N = $\frac{E \times A}{n \times F \times LLF \times UF}$ = $\frac{200 \times 12.83}{1 \times 1800 \times 0.75}$ = 1.9 ≈ 2
  - Fan:
    - Number of fans = $\frac{A(in\ sq-ft)}{100} = \frac{144.9}{100}$ =1.449
- 3rd & typical floor per unit (Bedroom2):
  - LED Lights:
    - Illuminance of Drawing room , E = 200 lux
    - Area , A = (11.5 * 12.6) sq-ft = 144.9 sq-ft = 144.9/10.76 m^2 = 13.47 m^2
    - Lumen of the light bulbs (10 Watt LED bulb), F = 1250 lm
    - Light loss factor* Utilization factor = LLF * UF = 0.75
    - Number of lights per illuminare, n=1
    - Number of light bulbs required = N
    - So, E = $\frac{n \times N \times F \times LLF \times UF}{A}$ => N = $\frac{E \times A}{n \times F \times LLF \times UF}$ = $\frac{200 \times 13.47}{1 \times 1250 \times 0.75}$ = 2.87 ≈ 3
  - Tubelights (for both normal & emergency case):
    - Illuminance of Drawing room , E = 200 lux

- Area , A = (11.5 * 12.6) sq-ft = 144.9 sq-ft = 144.9/10.76 m^2 = 13.47 m^2
- Lumen of the light bulbs (20 Watt tubelight), F = 1800 lm
- Light loss factor* Utilization factor = LLF * UF = 0.75
- Number of lights per illuminare, n=1
- Number of light bulbs required = N
- So, E = $\frac{n \times N \times F \times LLF \times UF}{A}$ => N = $\frac{E \times A}{n \times F \times LLF \times UF}$ = $\frac{200 \times 13.47}{1 \times 1800 \times 0.75}$ = 1.99 ≈ 2

- Fans:
  - Number of fans = $\frac{A(in\ sq-ft)}{100} = \frac{144.9}{100}$ =1.449

3rd & typical floor per unit (Toilet):

- Lights:
  - Illuminance of Drawing room , E = 200 lux
  - Area , A = (6.5 * 5) sq-ft = 32.5 sq-ft = 32.5/10.76 m^2 = 3.02m^2
  - Lumen of the light bulbs (10 Watt LED bulb), F = 1250 lm
  - Light loss factor* Utilization factor = LLF * UF = 0.75
  - Number of lights per illuminare, n=1
  - Number of light bulbs required = N
  - So, E = $\frac{n \times N \times F \times LLF \times UF}{A}$ => N = $\frac{E \times A}{n \times F \times LLF \times UF}$ = $\frac{200 \times 3.02}{1 \times 1250 \times 0.75}$ = .64 ≈ 1

3rd & typical floor per unit (Kitchen):

- Lights:
  - Illuminance of Drawing room , E = 250 lux
  - Area , A = (7.5 * 6.2) sq-ft = 46.5 sq-ft = 46.5/10.76 m^2 = 4.32m^2
  - Lumen of the light bulbs (10 Watt LED bulb), F = 1250 lm
  - Light loss factor* Utilization factor = LLF * UF = 0.75
  - Number of lights per illuminare, n=1
  - Number of light bulbs required = N
  - So, E = $\frac{n \times N \times F \times LLF \times UF}{A}$ => N = $\frac{E \times A}{n \times F \times LLF \times UF}$ = $\frac{250 \times 4.32}{1 \times 1250 \times 0.75}$ = 1.15 ≈ 2
- Small fan:
  - Number of fans = $\frac{A(in\ sq-ft)}{100} = \frac{46.5}{100}$ =.465 =1

- 3rd & typical floor per unit (Store room):
  - Lights:
    - Illuminance of Drawing room , E = 200 lux
    - Area , A = (7.1 * 3.8) sq-ft = 27 sq-ft = 27/10.76 m^2 = 2.5m^2
    - Lumen of the light bulbs (10 Watt LED bulb), F = 1250 lm
    - Light loss factor* Utilization factor = LLF * UF = 0.75
    - Number of lights per illuminare, n=1
    - Number of light bulbs required = N
    - So, E = $\frac{n \times N \times F \times LLF \times UF}{A}$ => N = $\frac{E \times A}{n \times F \times LLF \times UF}$ = $\frac{200 \times 2.5}{1 \times 1250 \times 0.75}$ = .53 ≈ 1

- 3rd & typical floor per unit (Dining room):
  - Lights :
    - Illuminance of Drawing room , E = 200 lux
    - Area , A = (10 * 9.5) sq-ft = 95 sq-ft = 95/10.76 m^2 = 8.83m^2
    - Lumen of the light bulbs (10 Watt LED bulb), F = 1250 lm
    - Light loss factor* Utilization factor = LLF * UF = 0.75
    - Number of lights per illuminare, n=1
    - Number of light bulbs required = N
    - So, E = $\frac{n \times N \times F \times LLF \times UF}{A}$ => N = $\frac{E \times A}{n \times F \times LLF \times UF}$ = $\frac{200 \times 8.83}{1 \times 1250 \times 0.75}$ = 1.88 ≈ 2
  - Tubelight :
    - Illuminance of Drawing room , E = 200 lux
    - Area , A = (10 * 9.5) sq-ft = 95 sq-ft = 95/10.76 m^2 = 8.83m^2
    - Lumen of the light bulbs (20 Watt), F = 1800 lm
    - Light loss factor* Utilization factor = LLF * UF = 0.75
    - Number of lights per illuminare, n=1
    - Number of light bulbs required = N
    - So, E = $\frac{n \times N \times F \times LLF \times UF}{A}$ => N = $\frac{E \times A}{n \times F \times LLF \times UF}$ = $\frac{200 \times 8.83}{1 \times 1800 \times 0.75}$ = 1.3 ≈ 2
  - Large Fans:
    - Number of fans = $\frac{A(in\ sq-ft)}{100} = \frac{95}{100}$ =.95 =1

- 3rd & typical floor per unit (Dining space):
  - Lights:
    - Illuminance of Drawing room , E = 200 lux
    - Area , A = (11.7 * 11.5) sq-ft = 134.55 sq-ft = 134.55/10.76 m^2 = 7.10 m^2

- Lumen of the light bulbs (10 Watt), F = 1250 lm
- Light loss factor* Utilization factor = LLF * UF = 0.75
- Number of lights per illuminare, n=1
- Number of light bulbs required = N
- So, E = $\frac{n \times N \times F \times LLF \times UF}{A}$ => N = $\frac{E \times A}{n \times F \times LLF \times UF}$ = $\frac{200 \times 7.1}{1 \times 1250 \times 0.75}$ = 1.5 ≈ 2

- Tubelights:
  - Illuminance of Drawing room , E = 200 lux
  - Area , A = (11.7 * 11.5) sq-ft = 134.55 sq-ft = 134.55/10.76 m^2 = 7.10 m^2
  - Lumen of the light bulbs (10 Watt), F = 1800 lm
  - Light loss factor* Utilization factor = LLF * UF = 0.75
  - Number of lights per illuminare, n=1
  - Number of light bulbs required = N
  - So, E = $\frac{n \times N \times F \times LLF \times UF}{A}$ => N = $\frac{E \times A}{n \times F \times LLF \times UF}$ = $\frac{200 \times 7.1}{1 \times 1800 \times 0.75}$ = 1.05 ≈ 2

- Small Fans:
  - Number of fans = $\frac{A(in\ sq-ft)}{100} = \frac{134.55}{100}$ =1.34 =2

3rd & typical floor per unit (veranda attached to dining room):

- LC Lights :
  - Illuminance of Drawing room , E = 200 lux
  - Area , A = (10 * 2.5) sq-ft = 25 sq-ft = 25/10.76 m^2 = 2.32 m^2
  - Lumen of the light bulbs (10 Watt), F = 1250 lm
  - Light loss factor* Utilization factor = LLF * UF = 0.75
  - Number of lights per illuminare, n=1
  - Number of light bulbs required = N
  - So, E = $\frac{n \times N \times F \times LLF \times UF}{A}$ => N = $\frac{E \times A}{n \times F \times LLF \times UF}$ = $\frac{200 \times 2.32}{1 \times 1250 \times 0.75}$ = .5 ≈ 1

3rd & typical floor per unit (veranda attached to bedroom 2):

- LC Lights :
  - Illuminance of Drawing room , E = 200 lux
  - Area , A = (3.7 * 3) sq-ft = 11.1 sq-ft = 11.1/10.76 m^2 = 1.03 m^2
  - Lumen of the light bulbs (10 Watt), F = 1250 lm
  - Light loss factor* Utilization factor = LLF * UF = 0.75

- Number of lights per illuminare, n=1
- Number of light bulbs required = N
- So, E = $\frac{n \times N \times F \times LLF \times UF}{A}$ => N = $\frac{E \times A}{n \times F \times LLF \times UF}$ = $\frac{200 \times 1.03}{1 \times 1250 \times 0.75}$ = .22 ≈ 1
-

- 3rd & typical floor per unit (veranda attached to bedroom 1):
  - LC Lights :
    - Illuminance of Drawing room , E = 200 lux
    - Area , A = (9.9 * 2.5) sq-ft = 24.75 sq-ft = 24.75/10.76 m^2 = 2.3 m^2
    - Lumen of the light bulbs (10 Watt), F = 1250 lm
    - Light loss factor* Utilization factor = LLF * UF = 0.75
    - Number of lights per illuminare, n=1
    - Number of light bulbs required = N
    - So, E = $\frac{n \times N \times F \times LLF \times UF}{A}$ => N = $\frac{E \times A}{n \times F \times LLF \times UF}$ = $\frac{200 \times 2.3}{1 \times 1250 \times 0.75}$ = .49 ≈ 1

Each floor has 2 symmetric units. So calculation will be same for both units.

- Light protection system:

Building Length – 48'-8"
Building width -35'-4"

Air conductor calculation:
One conductor at each of the 4 corners.

Maximum distance between 2 air conductor is 25'.
So, along width we need 2 air conductors at the middle.
And along length 2 air conductor is needed.
The perimeter of the building is 2*(48.6+35.3)=167.8 feet
So down conductor required is 167.8/100=2
So, Down conductor required is 2
For safety purpose we have taken 3 down conductor.

- Current (Generalized)
  - **LED bulb:**
    Power rating of each LED bulb is 10W. Current flow through light bulb, I= $\frac{P}{V*pf}$ = 0.048A
  - **LED tube light:**
    Power rating of each LED tubelight is 20W (130 lm per watt, so 1250 lm is almost 10W). Current flow through tube light,
    I= $\frac{P}{V*pf}$ = 0.096A
  - **Exhaust fan (EF):**
    Power rating of each Exhaust fan is 20W (5W-35W). Current flow through EF, I= $\frac{P}{V*pf}$ = 0.12A
  - **2 pin 5A socket at switchboard level (SS) :**
    This is for charging a mobile (2-5W)) or laptop(20-50W) or desktop computer (200W). So, maximum current flow through SS, I= $\frac{P}{V*pf}$ = 1.16 A
  - **Power Sockets:**
    - **P:** These are redundant power sockets for living rooms for washing machine, iron or other high power accessories , let standard SP MCB rating = 15A, so 2X4 rm BYM + 4 rm BYA ECC wire is needed.
    - **Q:** These are redundant power sockets for living rooms for washing machine, iron or other high power accessories , let standard SP MCB rating = 15A, so 2X4 rm BYM + 4 rm BYA ECC wire is needed.
  - **Ceiling Fan:**
    - Power rating of each a 56 inch wing ceiling fan is 80 W. Current flow through ceiling fan, I= $\frac{P}{V*pf}$ = 0.386 A
    - Power rating of each a 36 inch wing ceiling fan is 75 W. Current flow through ceiling fan, I= $\frac{P}{V*pf}$ = 0.362 A

Description **reviews**

Product Details of GFC VIP 56" Ceiling Fan

- Superior quality aluminum alloy construction.
- Energy-efficient Electrical Steel Sheet and 99.9% Pure Copper Wire.
- "E" grade varnish insulation to protect from electric shock and voltage fluctuation.
- Aerodynamically designed blades for maximum air delivery.
- High -quality paint for superior finishing.
- Packed in strong corrugated cartons with a protective thermophore.

Size: 1400mm
Types: Capacitor
Speed: 330 RPM
Blades: 3
Power consumption: 80W
Service Value: 110.31 ft3/min/watt
Air delivery: 250 m³/min"

Description Reviews

Code: 901470
Size: 900mm/36"
Color: White

Features:
* 99.9% pure copper wire
* High quality electric silicon sheet
* High precisions chrome steel ball bearings
* Powder coating paint
* Whisper quiet motor
* Regulated/Dimmer control
* Ideal for year round operation
* Safety wire for preventing any unwanted accidents
* Aerodynamic blades allow high velocity and maximum air delivery throughout the room

Technical Specifications:
* Rated Voltage: 220-230 Volt
* Rated Power: 75 Watt
* Frequency: 50Hz
* Speed: 540 R.P.M.
* Air Delivery: 250 M^3/Min

- Current (unitwise) :
  - **Switch Board Connection Diagram – Ground Floor**

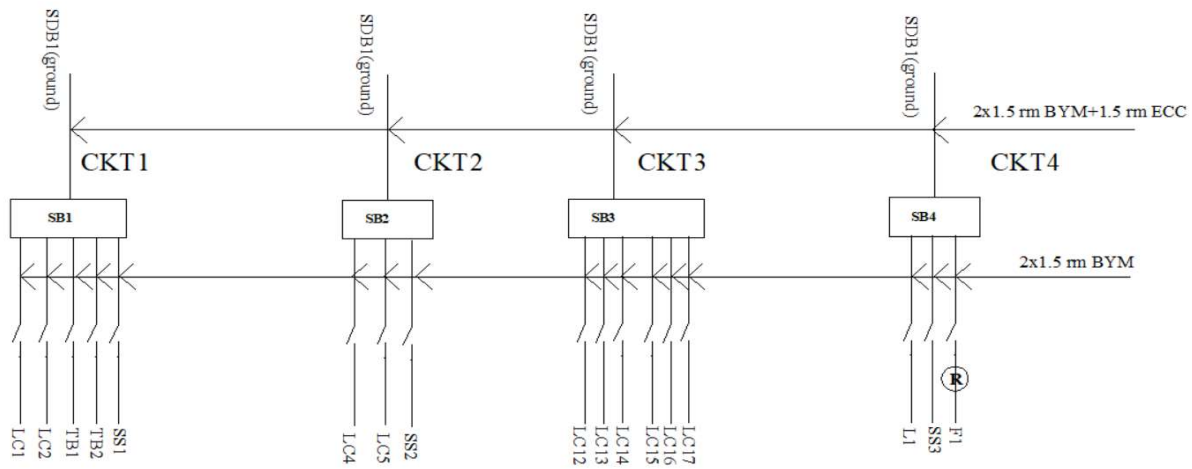

  - **Circuit Current calculation– Ground Floor**

CKT1:

Component connecting to SB1 are LC1,LC2,TB1,TB2 and SS1.

Total current for circuit1=2*0.048+2*0.096+1.16=1.448A < 5A

So 2x1.5 rm BYM +1.5 rm BYA ECC cable are required.

CKT2:

Component connecting to SB2 are LC4,LC5 and SS2.

Total current for circuit2=0.048+0.048+1.16=1.256A < 5A

So 2x1.5 rm BYM +1.5 rm BYA ECC cable are required.

CKT3:

Component connecting to SB3 are LC12,LC13,LC14,LC15,LC16,LC17.

Total current for circuit3=6*0.048=0.288A < 5A

So 2x1.5 rm BYM +1.5 rm BYA ECC cable are required.

CKT4:

Component connecting to SB4 are L1,F1, SS3.

Total current for circuit4=0.048+0.362+1.16=1.57A < 5A

So 2x1.5 rm BYM +1.5 rm BYA ECC cable are required.

Emergency Switch Board Connection Diagram – Ground Floor

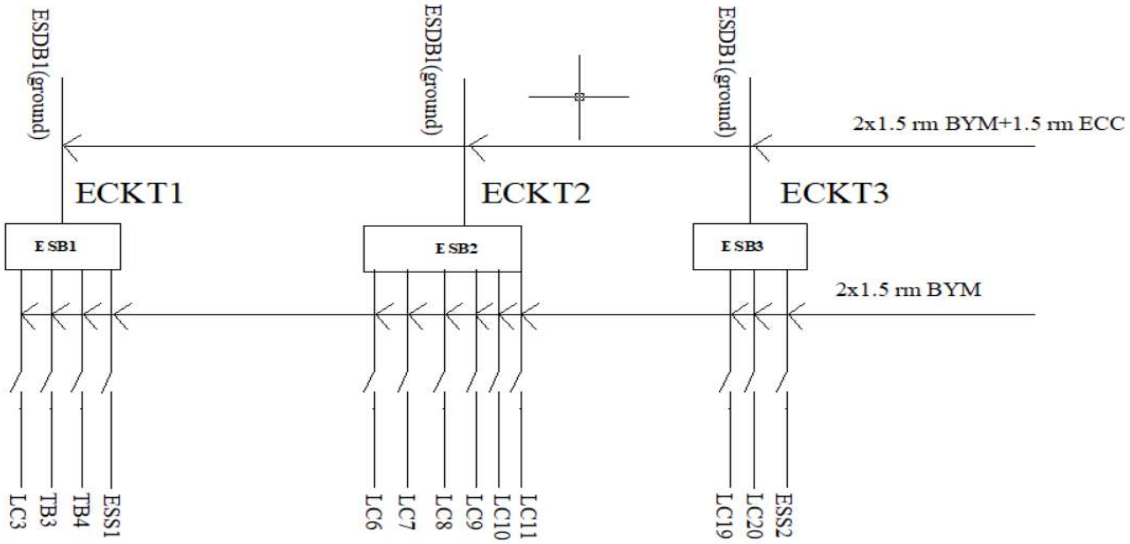

- ## Emergency Circuit Current calculation– Ground Floor

ECKT1:
Component connecting to ESB1 are LC3,TB3,TB4 and ESS1.
Total current for circuit1=0.048+2*0.096+1.16=1.4A < 5A
So 2x1.5 rm BYM +1.5 rm BYA ECC cable are required.

ECKT2:
Component connecting to ESB2 are LC6,LC7,LC8,LC9,LC10,LC11.
Total current for circuit2=6*0.048=0.288A < 5A
So 2x1.5 rm BYM +1.5 rm BYA ECC cable are required.

ECKT3:
Component connecting to ESB3 are LC19,LC20,ESS2
Total current for circuit3=2*0.048+1.16=1.256A < 5A
So 2x1.5 rm BYM +1.5 rm BYA ECC cable are required.

Sub Distribution Board(SDB) Diagram – Ground Floor

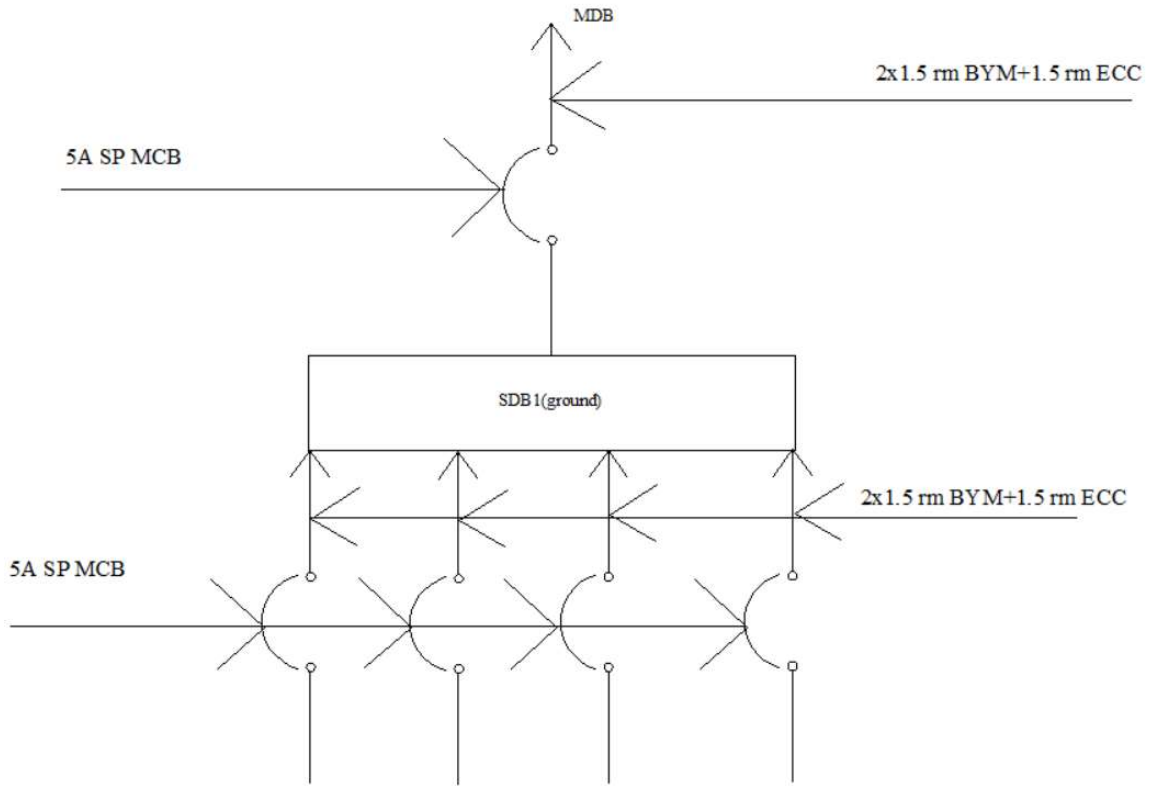

- **SDB Circuit Current calculation– Ground Floor**

  CKT1 =1.448A
  CKT2 =1.256A
  CKT3 =0.288A
  CKT4 =1.57A
  Total Current = 4.562A < 5A
  So 2x1.5 rm BYM +1.5 rm BYA ECC cable are required

- **Emergency Sub Distribution Board(ESDB) Diagram – Ground Floor**

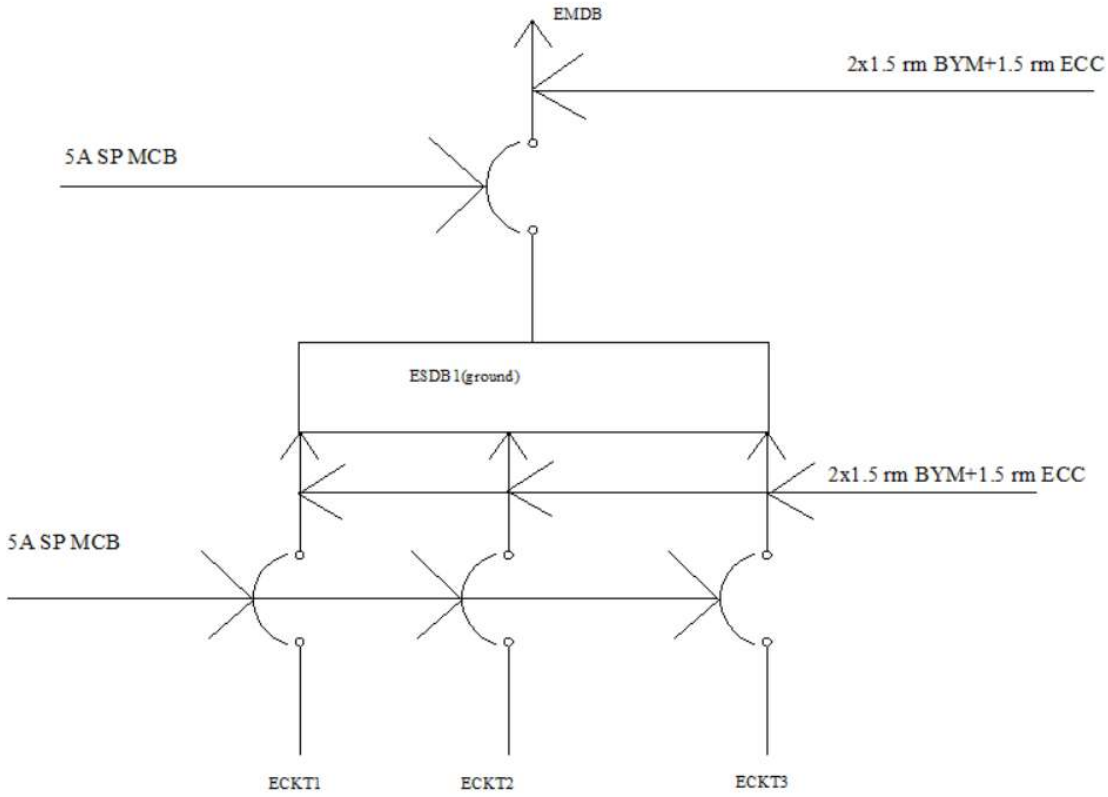

- **ESDB Circuit Current calculation– Ground Floor**

ECKT1 =1.44A
ECKT2 =0.288A
ECKT3 =1.256A
Total Current = 2.984A < 5A
So 2x1.5 rm BYM +1.5 rm BYA ECC cable are required

- **Switch Board Connection Diagram – 1st and 2nd Floor**

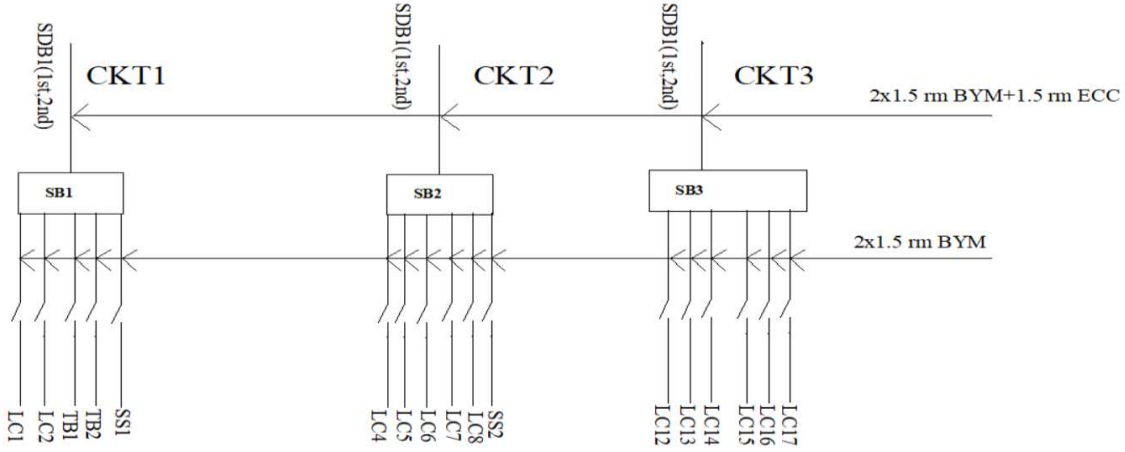

- **Emergency Switch Board Connection Diagram – 1st and 2nd Floor**

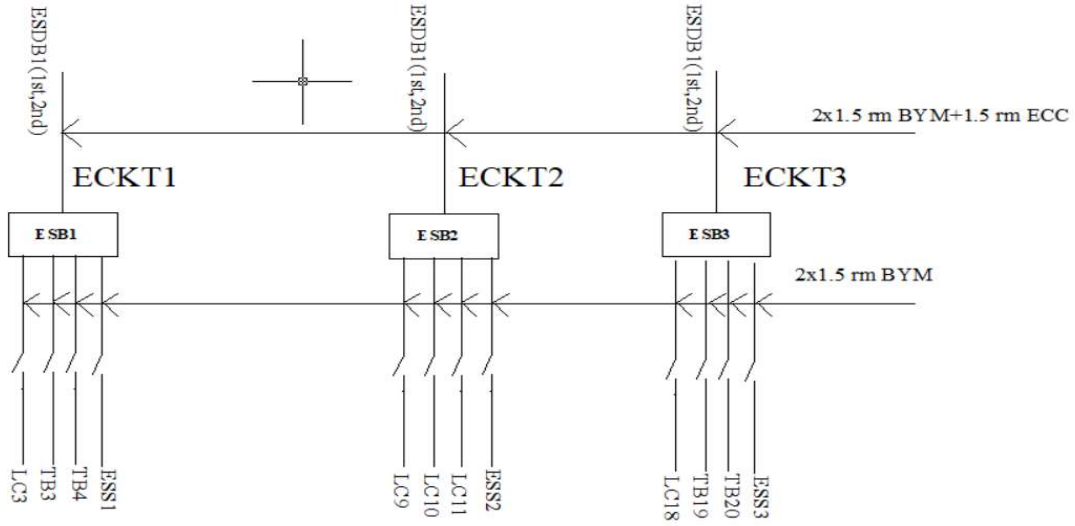

- **Sub Distribution Board(SDB) Diagram – 1st and 2nd Floor**

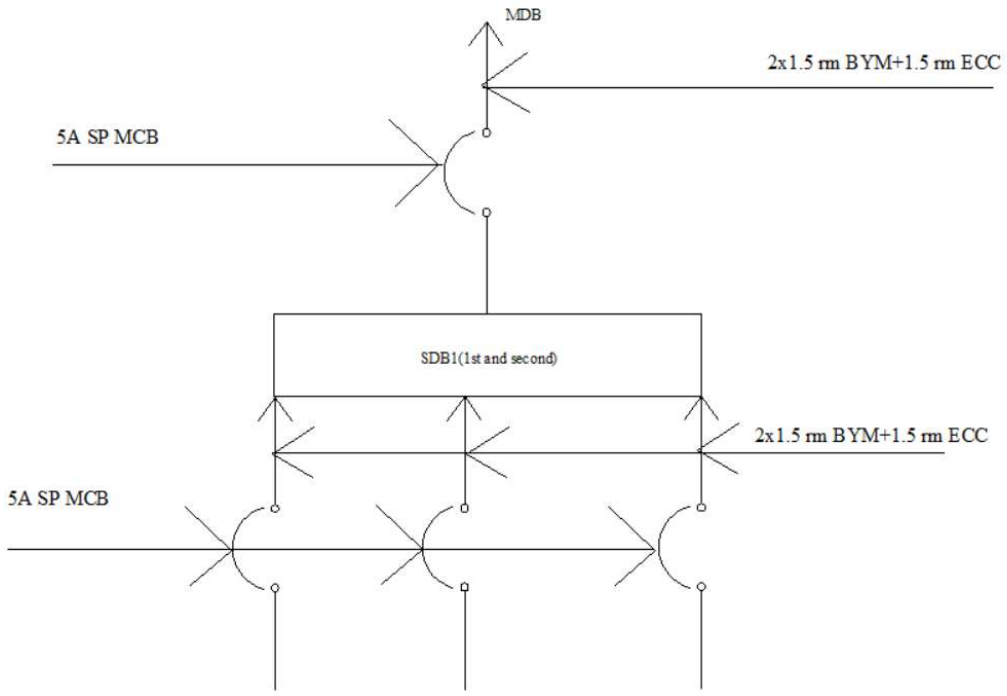

- **Emergency Sub Distribution Board(ESDB) Diagram – 1st and 2nd Floor**

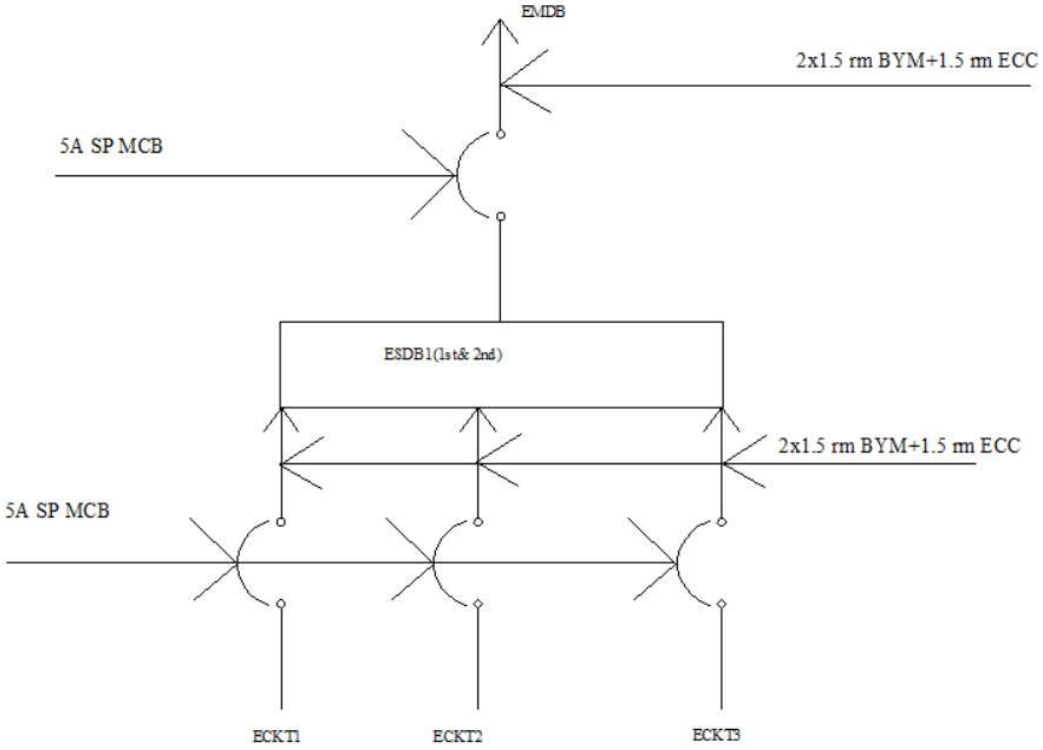

- **Switch Board Connection Diagram – Third Floor SDB1**

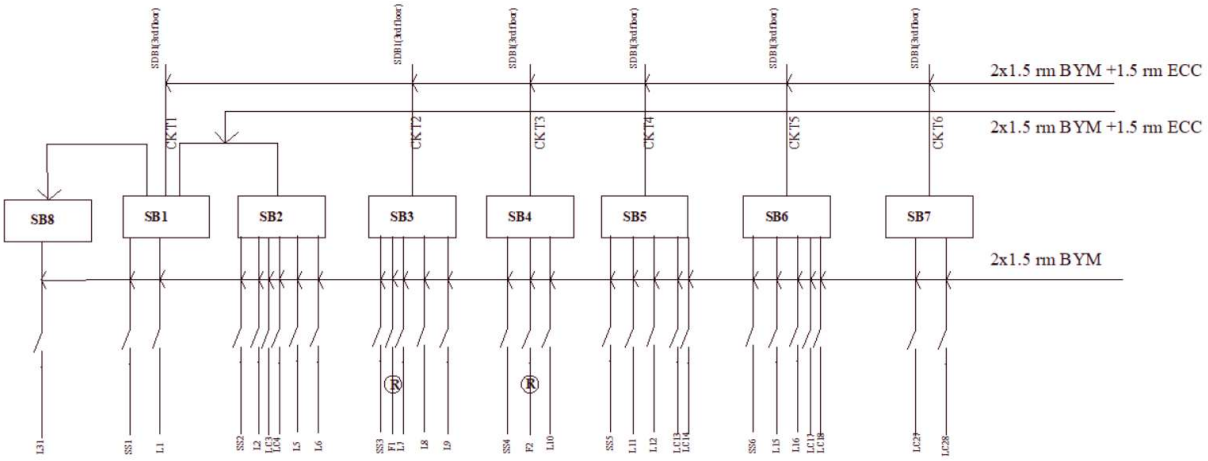

- **Switch Board Connection Diagram – Third Floor ESDB1**

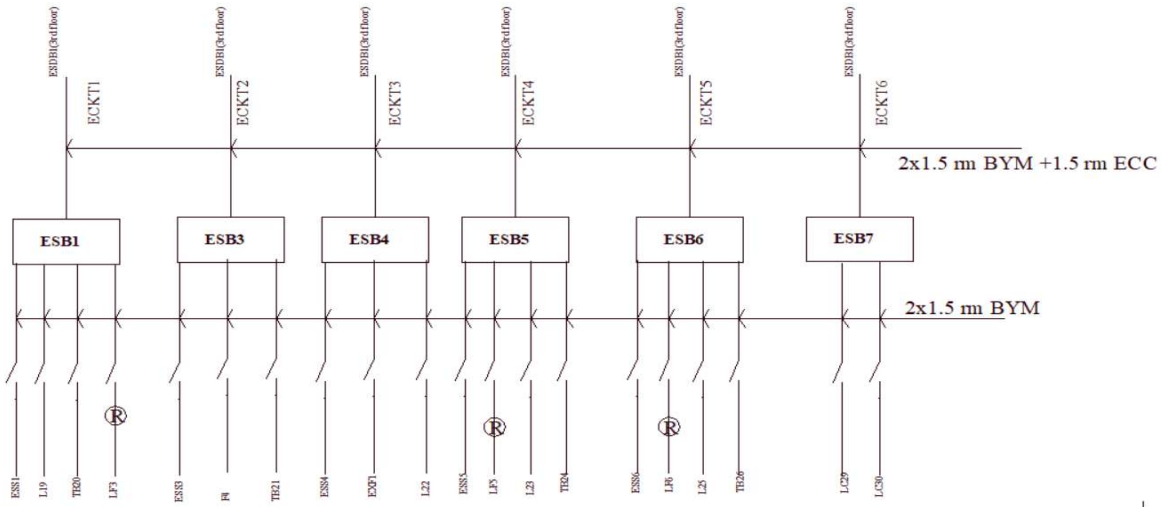

- **Sub Distribution Board(SDB) Diagram – third Floor**

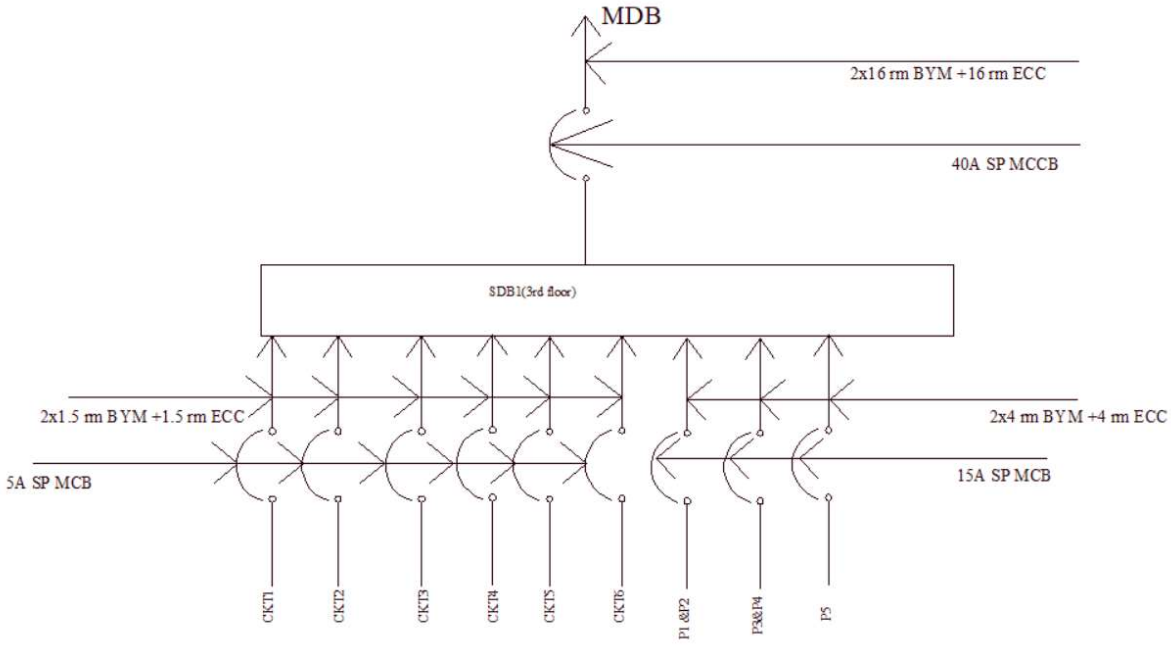

- **SDB Current Calculation– Third Floor SDB1**

CKT1 =2.656A
CKT2 =1.663A
CKT3 =1.57A
CKT4 =1.352A
CKT5 =1.352A
CKT6 =0.096A

P = 15A * 3
Total Current = 8.689 + P x0.5 = 31.189A
So 2x16 rm BYM +16 rm BYA ECC cable are required

- **Emergency Sub Distribution Board(ESDB) Diagram – third Floor**

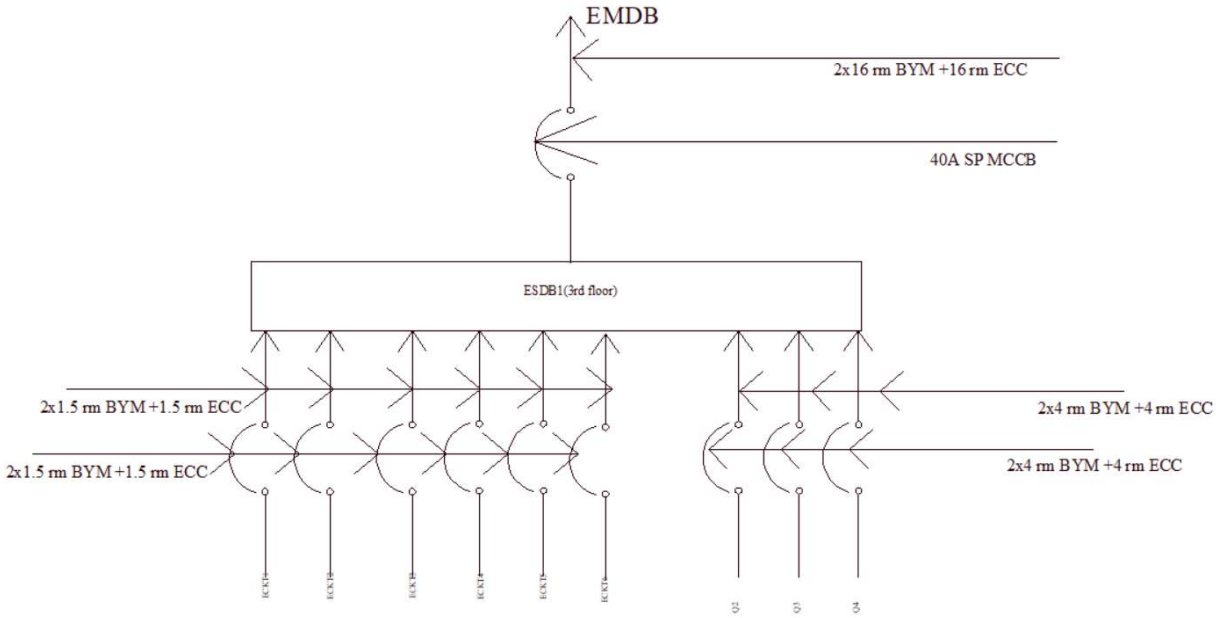

- **ESDB Current Calculation– Third Floor ESDB1**

ECKT1 =1.6904A
ECKT2 =1.6183A
ECKT3 =1.328A
ECKT4 =1.6904A
ECKT5 =1.6904A
ECKT6 =0.096A
Q = 15A * 3
Total Current = 8.096 + Q x0.5 = 30.596A
So 2x16 rm BYM +16 rm BYA ECC cable are required

- **Main Distribution Board diagram**

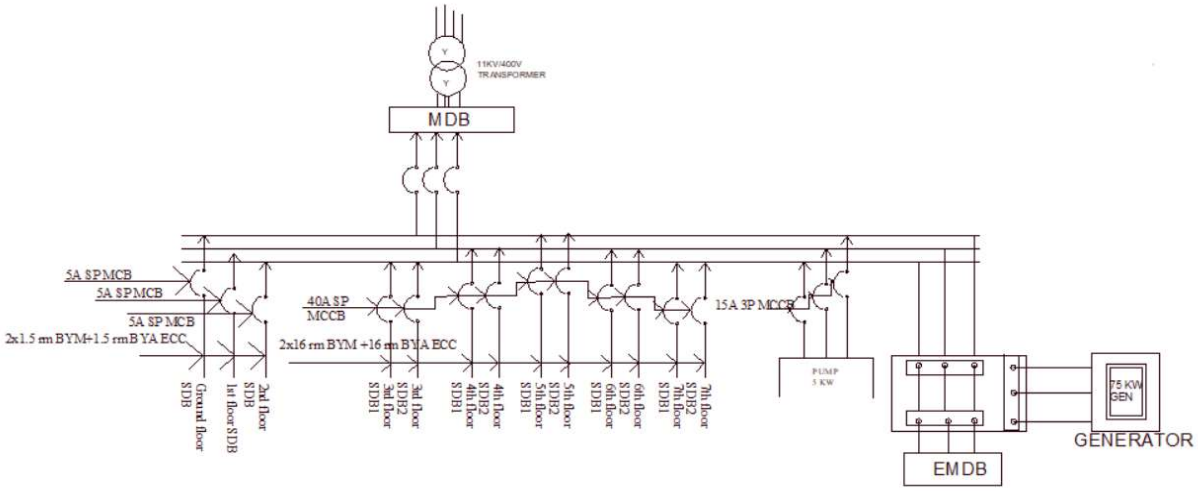

- **POWER Calculation for MDB**

Floor0:

P=VI*PF=230*4.56*0.9=943.94 Watt

Floor1:

P=VI*PF=230*3.136*0.9=649.152Watt

Floor2:

P=VI*PF=230*3.136*0.9=649.152Watt

Floor3(for 1 unit):

P=VI*PF=230*31.189*0.9=6.5KWatt

Floor4 (for 1 unit) :

P=VI*PF=230*31.189*0.9=6.5KWatt

Floor5 (for 1 unit) :

P=VI*PF=230*31.189*0.9=6.5KWatt

Floor6 (for 1 unit):

P=VI*PF=230*31.189*0.9=6.5KWatt

Floor7 (for 1 unit):

P=VI*PF=230*31.189*0.9=6.5KWatt

PUMP:

p = 5kw

- **Total power**=(72.241+73.323)KW

=145.564KW

- **Emergency Main Distribution Board diagram**

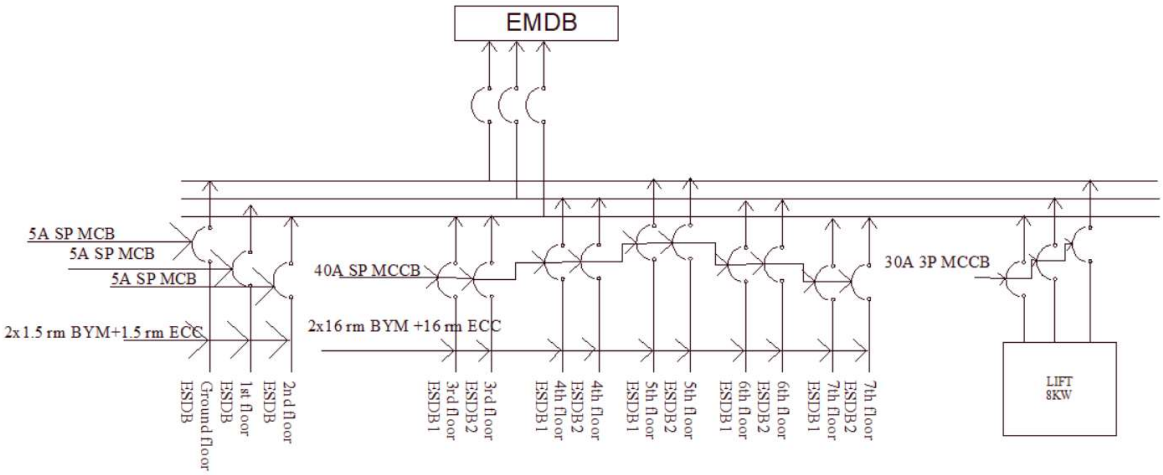

- **POWER Calculation for EMDB**

Floor0:

P=VI*PF=230*3.024*0.9=625 Watt

Floor1:

P=VI*PF=230*4.104*0.9=849.5Watt

Floor2:

P=VI*PF=230*4.104*0.9=849.5Watt

Floor3 (for 1 unit) :

P=VI*PF=230*30.596*0.9=6. 3KWatt

Floor4 (for 1 unit):

P=VI*PF=230*30.596*0.9=6. 3KWatt

Floor5 (for 1 unit):

P=VI*PF=230*30.596*0.9=6. 3KWatt

Floor6 (for 1 unit):

P=VI*PF=230*30.596*0.9=6. 3KWatt

Floor7 (for 1 unit):

P=VI*PF=230*30.596*0.9=6. 3KWatt

Lift:

P = 8Kw

Total power=73.323KW