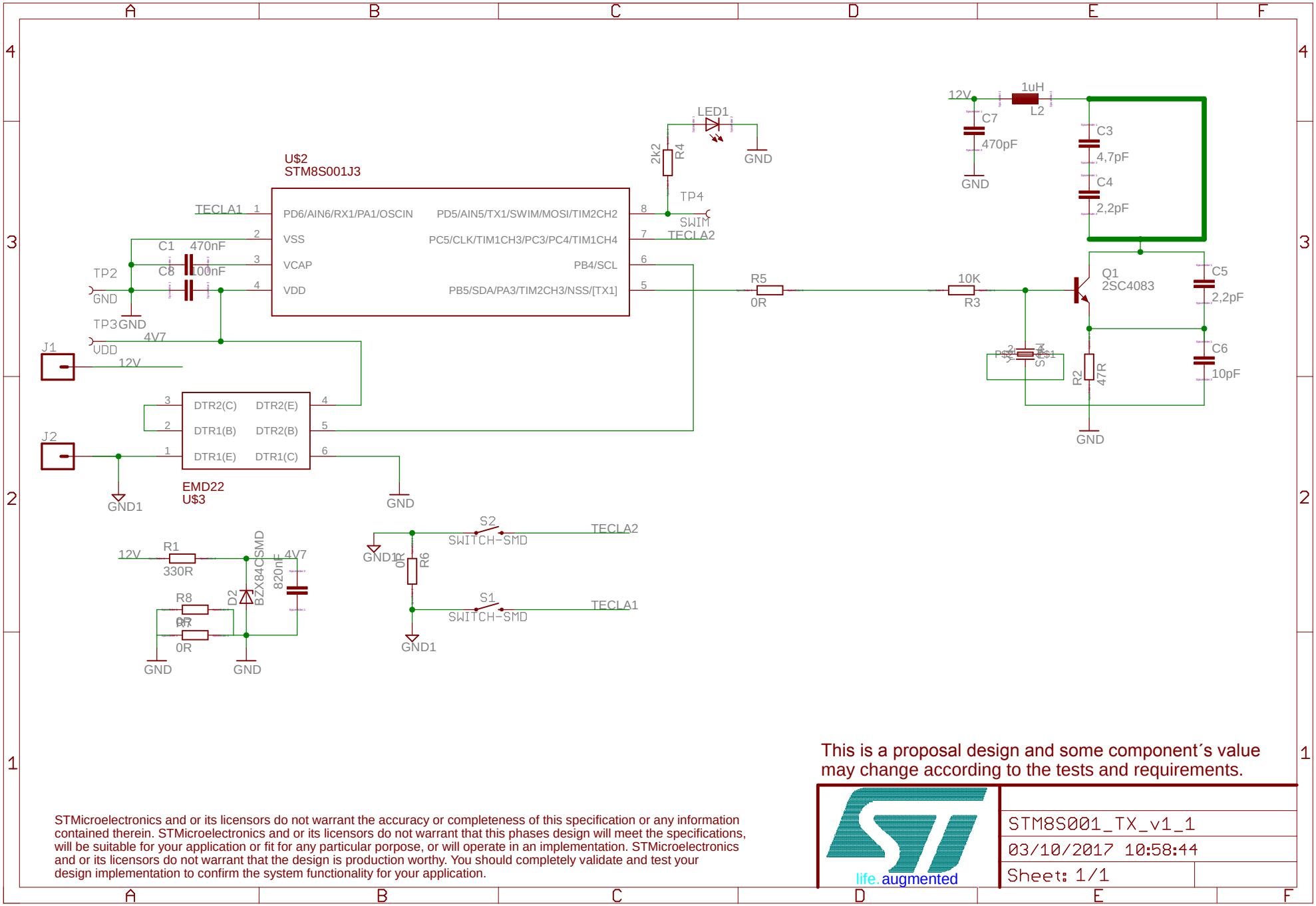

This is a proposal design and some component´s value may change according to the tests and requirements.

STMicroelectronics and or its licensors do not warrant the accuracy or completeness of this specification or any information contained therein. STMicroelectronics and or its licensors do not warrant that this phases design will meet the specifications, will be suitable for your application or fit for any particular porpose, or will operate in an implementation. STMicroelectronics and or its licensors do not warrant that the design is production worthy. You should completely validate and test your design implementation to confirm the system functionality for your application.

life.augmented

STM8S001_TX_v1_1

03/10/2017 10:58:44

Sheet: 1/1