Description

The 74HC595 is an high speed CMOS device.

An eight bit shift register accpets data from the serial input (DS) on each positive transition of the shift register clock (SHCP). When asserted low the reset function ($\overline{MR}$) sets all shift register values to zero and is indepent of all clocks.

Data from the input serial shift register is placed in the output register with a rising pulse on the storages resister clock (STCP). With the output enable ($\overline{OE}$) asserted low the 3-state outputs Q0-Q7 become active and present th

All registers capture data on rising edge and change output on the falling edge. If both clocks are connected together the input shift register is always one clock cycle ahead of the output register.

Pin Assignments

(Top View)

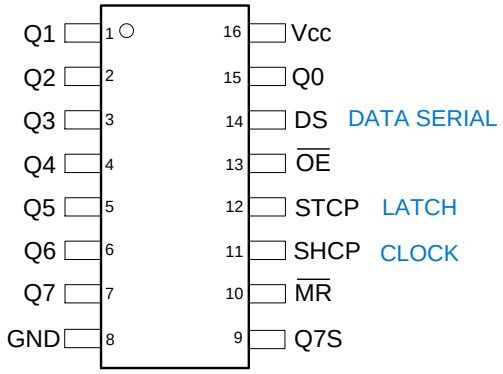

SO-16 / TSSOP-16

Features

- Wide Supply Voltage Range from 2.0V to 6.0V
- Sinks or Sources 8mA at V_{CC} = 4.5V
- CMOS Low Power Consumption
- Schmitt Trigger Action at All Inputs
- Inputs Accept up to 6.0V
- ESD Protection Tested per JESD 22
  - Exceeds 200-V Machine Model (A115-A)
  - Exceeds 2000-V Human Body Model (A114-A)
  - Exceeds 1000-V Charged Device Model (C101C)
- Latch-Up Exceeds 250mA per JESD 78, Class II
- **Totally Lead-Free & Fully RoHS Compliant (Notes 1 & 2)**
- **Halogen and Antimony Free. “Green” Device (Note 3)**

Applications

- General Purpose Logic
- Serial to Parallel Data Conversion
- Capture and Hold Data for Extended Periods of Time
- Allow Simple Serial Bit Streams from a Microcontroller to Control as Many Peripheral Lines as Needed
- Wide Array of Products such as:
  - Computer Peripherals
  - Appliances
  - Industrial Control

Notes: 1. No purposely added lead. Fully EU Directive 2002/95/EC (RoHS), 2011/65/EU (RoHS 2) & 2015/863/EU (RoHS 3) compliant.
2. See https://www.diodes.com/quality/lead-free/ for more information about Diodes Incorporated’s definitions of Halogen- and Antimony-free, "Green" and Lead-free.
3. Halogen- and Antimony-free "Green” products are defined as those which contain <900ppm bromine, <900ppm chlorine (<1500ppm total Br + Cl) and <1000ppm antimony compounds.

© Diodes Incorporated

Pin Descriptions

Pin Number	Pin Name	Function
1	Q1	Parallel Data Output 1
2	Q2	Parallel Data Output 2
3	Q3	Parallel Data Output 3
4	Q4	Parallel Data Output 4
5	Q5	Parallel Data Output 5
6	Q6	Parallel Data Output 6
7	Q7	Parallel Data Output 7
8	GND	Ground
9	Q7S	Serial Data Output
10	$\overline{MR}$	Master Reset Input
11	SHCP	Shift Register Clock Input
12	STCP	Storage Register Clock Input
13	$\overline{OE}$	Output Enable Input
14	DS	Serial Data Input
15	Q0	Parallel Data Output 0
16	V_{CC}	Supply Voltage

Functional Diagram

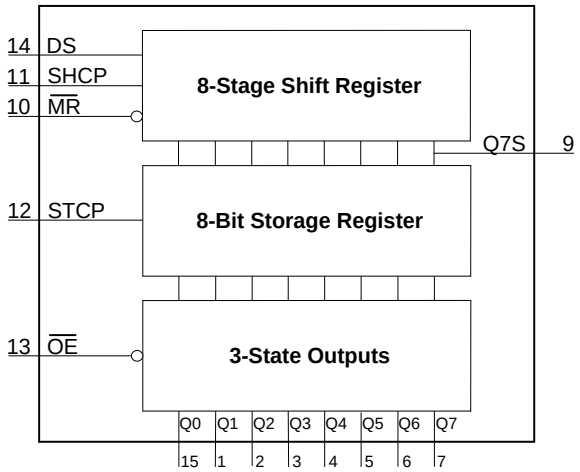

Logic Diagram

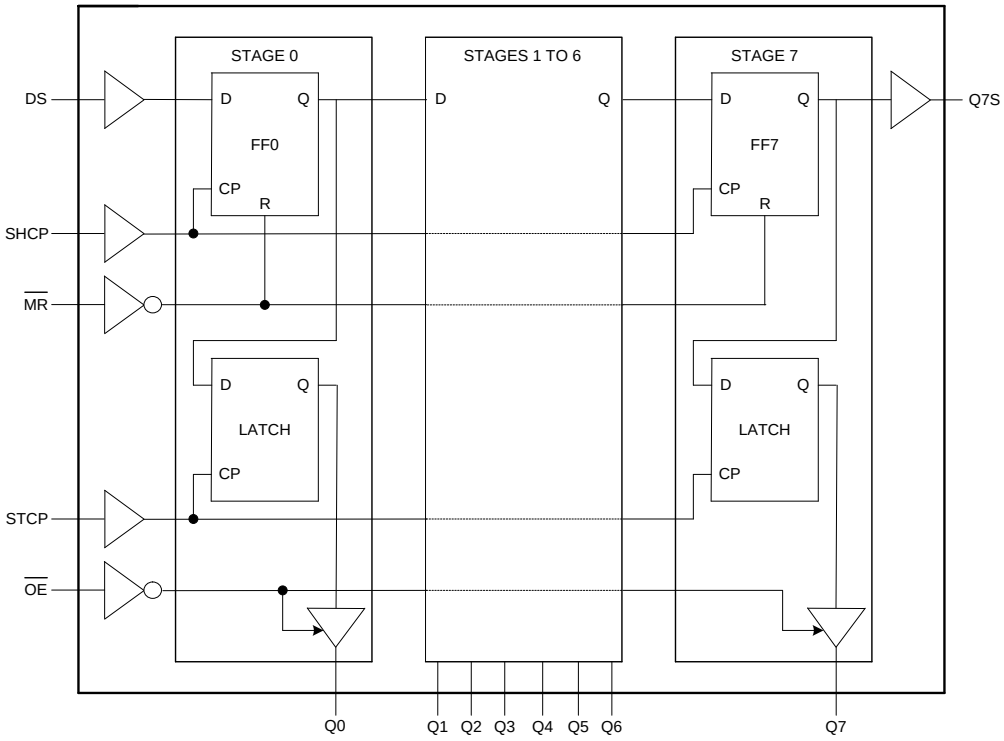

© Diodes Incorporated

Functional Description and Timing Diagram

Control				Input	Output		Function
SHCP	STCP	$\overline{OE}$	$\overline{MR}$	DS	Q7S	Qn	
X	X	L	L	–	L	NC	Low-level asserted on MR clears shift register. Storage register is unchanged.
X	↑	L	L	–	L	L	Empty shift register transferred to storage register.
X	X	H	L	–	L	Z	Shift register remains clear; All Q ouputs in Z state.
↑	X	L	H	–	Q6S	NC	HIGH is shifted into first stage of Shift Register Contents of each register shifted to next register. The content of Q6S has been shifted to Q7S and now appears on device pin Q7S.
X	↑	L	H	–	NC	QnS	Contents of shift register copied to storage register. With output now in active state the storage resister contents appear on Q outputs.
↑	↑	L	H	–	Q6S	QnS	Contents of shift register copied to output register then shift register shifted.

H=HIGH Voltage State
L=LOW Voltage State
↑=LOW to HIGH Transition
X= Don'T Care – High or Low (Not Floating)
NC= No Change
Z= High-Impedance State

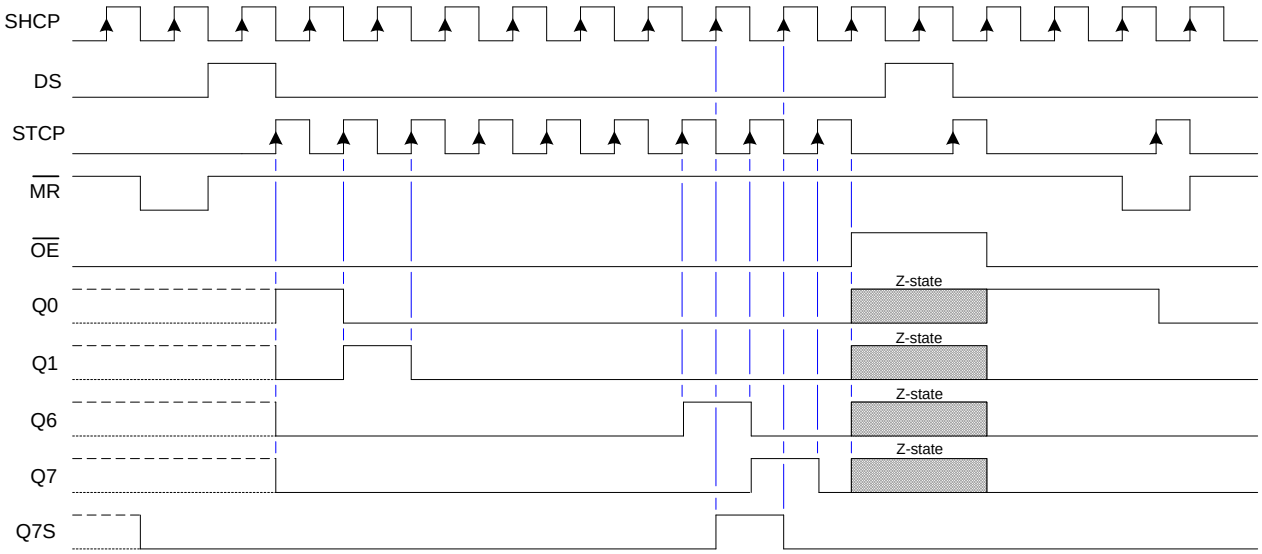

© Diodes Incorporated

Absolute Maximum Ratings (Note 4) (@T_A = +25°C, unless otherwise specified.)

Symbol	Description		Rating	Unit
ESD HBM	Human Body Model ESD Protection		2	kV
ESD CDM	Charged Device Model ESD Protection		1	kV
ESD MM	Machine Model ESD Protection		200	V
V_{CC}	Supply Voltage Range		-0.5 to +7.0	V
V_I	Input Voltage Range		-0.5 to +7.0	V
V_o	Voltage Applied to Output in High or Low State		-0.3 to V_{CC} +0.5	V
I_{IK}	Input Clamp Current V_I < -0.5V		-20	mA
I_{IK}	Input Clamp Current V_I > V_{CC} +0.5V		20	mA
I_{OK}	Output Clamp Current V_O < -0.5V		-20	mA
I_{OK}	Output Clamp Current V_O > V_{CC} +0.5V		20	mA
I_O	Continuous Output Current	Q7 Standard Output	±25	mA
		Qn Bus Driver Outputs	±35	mA
I_{CC}	Continuous Current through Vdd or GND		70	mA
I_{GND}	Continuous Current through Vdd or GND		-70	mA
T_J	Operating Junction Temperature		-40 to +150	°C
T_{STG}	Storage Temperature		-65 to +150	°C
P_{TOT}	Total Power Dissipation		500	mW

Note: 4. Stresses beyond the absolute maximum may result in immediate failure or reduced reliability. These are stress values and device operation should be within recommend values.

Recommended Operating Conditions (Note 5) (@T_A = +25°C, unless otherwise specified.)

Symbol	Parameter	Conditions	Min	Max	Unit
V_{CC}	Supply Voltage	–	2.0	6.0	V
V_I	Input Voltage	–	0	V_{CC}	V
V_O	Output Voltage	Active Mode	0	V_{CC}	V
Δt/ΔV	Input Transition Rise or Fall Rate	V_{CC} = 2.0V	–	1000	ns/V
		V_{CC} = 4.5V	–	500	
		V_{CC} = 6.0V	–	400	–
T_A	Operating Free-Air Temperature	–	-40	+125	°C

Note: 5. Unused inputs should be held at V_{CC} or Ground.

© Diodes Incorporated

Electrical Characteristics (@T_A = +25°C, unless otherwise specified.)

Symbol	Parameter	Test Conditions	V_{CC}	T_A = +25°C			T_A = -40°C to +85°C		T_A = -40°C to +125°C		Unit
				Min	Typ	Max	Min	Max	Min	Max	
V_{IH}	High-Level Input Voltage	–	2.0V	1.5	1.2	–	1.5	–	1.5	–	V
		–	4.5V	3.15	2.4	–	3.15	–	3.15	–	
		–	6.0V	4.2	3.2	–	4.2	–	4.2	–	
V_{IL}	Low-Level Input Voltage	–	2.0V	–	0.8	0.5	–	0.5	–	0.5	V
		–	4.5V	–	2.1	1.35	–	1.35	–	1.35	
		–	6.0V	–	2.8	1.8	–	1.8	–	1.8	
V_{OH}	High-Level Output Voltage	I_{OH} = -20μA All Outputs	2.0V	1.9	2.0	–	1.9	–	1.9	–	V
			4.5V	4.4	4.5	–	4.4	–	4.4	–	
			6.0V	5.9	6.0	–	5.9	–	5.9	–	
	Q7S Output	I_{OH} = -4.0mA	4.5V	3.84	4.32	–	4.32	–	3.7	–	
		I_{OH} = -5.2mA	6.0V	5.34	5.81	–	5.81	–	5.2	–	
	Qn Bus Outputs	I_{OH} = -6.0mA	4.5V	3.84	4.32	–	4.32	–	3.7	–	
		I_{OH} = -7.8mA	6.0V	5.34	5.81	–	5.81	–	5.2	–	
V_{OL}	Low-Level Output Voltage	I_{OL} = 20μA All Outputs	2.0V	–	0	0.1	–	0.1	–	0.1	V
			4.5V	–	0	0.1	–	0.1	–	0.1	
			6.0V	–	0	0.1	–	0.1	–	0.1	
	Q7S Output	I_{OL} = 4.0mA	4.5V	–	.15	0.33	–	0.33	–	0.4	
		I_{OL} = 5.2mA	6.0V	–	.16	0.33	–	0.33	–	0.4	
	Qn Bus Outputs	I_{OL} = 6.0mA	4.5V	–	.15	0.33	–	0.33	–	0.4	
		I_{OL} = 7.8mA	6.0V	–	.16	0.33	–	0.33	–	0.4	
I_I	Input Current	V_I =GND to 5.5V	6.0V	–	–	±0.1	–	± 1	–	± 1	μA
I_{OZ}	OFF-State Output Current	Qn Internal High or Low Vo = V_{CC} or GND	6.0V	–	–	± 5	–	± 5	–	± 10	μA
I_{CC}	Supply Current	V_I = GND or V_{CC} I_O = 0	6.0V	–	–	8.0	–	80	–	160	μA
C_i	Input Capacitance	V_I = V_{CC} or GND	6.0V	–	4	10	–	10	–	10	pF

Operating Characteristics (@T_A = +25°C, unless otherwise specified.)

Parameter		Test Conditions	V_{CC} = 5V	Unit
			Typ	
C_{pd}	Power Dissipation Capacitance	f = 1 MHz All Outputs Switching-No Load	43	pF

© Diodes Incorporated

Switching Characteristics

Symbol / Parameter	Pins	Test Conditions	V_{CC}	T_A = +25°C			-40°C to +85°C		-40°C to +125°C		Unit
				Min	Typ	Max	Min	Max	Min	Max	
f_{MAX} Maximum Frequency	SHCP or STCP	Figure 1	2.0V	9	30	–	4.8	–	4	–	MHz
			4.5V	30	91	–	24	–	20	–	
			6.0V	35	108	–	28	–	24	–	
t_W Pulse Width	SHCP HIGH or LOW	Figure 1	2.0V	75	17	–	95	–	110	–	ns
			4.5V	15	6	–	19	–	22	–	
			6.0V	13	5	–	16	–	19	–	
	STCP HIGH or LOW	Figure 1	2.0V	75	11	–	95	–	110	–	
			4.5V	15	4	–	19	–	22	–	
			6.0V	13	3	–	16	–	19	–	
	$\overline{MR}$ LOW	Figure 1	2.0V	75	17	–	95	–	110	–	
			4.5V	15	6	–	19	–	22	–	
			6.0V	13	5	–	16	–	19	–	
t_{SU} Set-up Time	DS to SHCP	Figure 1	2.0V	50	11	–	65	–	75	–	ns
			4.5V	10	4	–	13	–	15	–	
			6.0V	9	3	–	11	–	13	–	
	SHCP tp STCP	Figure 1	2.0V	75	22	–	95	–	110	–	ns
			4.5V	15	8	–	19	–	22	–	
			6.0V	13	7	–	16	–	19	–	
t_H Hold Time	DS to SHCP	Figure 1	2.0V	3	-6	–	3	–	3	–	ns
			4.5V	3	-2	–	3	–	3	–	
			6.0V	3	-2	–	3	–	3	–	
t_{REC} Recovery Time	$\overline{MR}$ to SHCP	Figure 1	2.0V	50	-19	–	65	–	75	–	ns
			4.5V	10	-7	–	13	–	15	–	
			6.0V	9	-6	–	11	–	13	–	
t_{PD} Propagation Delay	SHCP to Q7S	Figure 1 C_L=50pF	2.0V	–	52	160	–	200	–	240	ns
			4.5V	–	19	32	–	40	–	48	
			6.0V	–	15	27	–	34	–	41	
	STCP to Qn	Figure 1 C_L=50pF	2.0V	–	55	175	–	220	–	265	ns
			4.5V	–	20	35	–	44	–	53	
			6.0V	–	16	30	–	37	–	45	
t_{PHL} Propagation Delay	$\overline{MR}$ to Q7S	Figure 1 C_L=50pF	2.0V	–	47	175	–	220	–	265	ns
			4.5V	–	17	35	–	44	–	53	
			6.0V	–	14	30	–	37	–	45	
t_{EN} Enable Time	$\overline{OE}$ to Qn	Figure 1 C_L=50pF	2.0V	–	47	150	–	190	–	225	ns
			4.5V	–	17	30	–	38	–	45	
			6.0V	–	14	26	–	33	–	38	
t_{DIS} Disable Time	$\overline{OE}$ to Qn	Figure 1 C_L=50pF	2.0V	–	41	150	–	190	–	225	ns
			4.5V	–	15	30	–	38	–	45	
			6.0V	–	12	26	–	33	–	38	

© Diodes Incorporated

Parameter Measurement Information

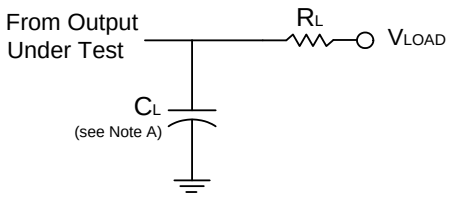

TEST	V_{LOAD}
t_{PLH}/t_{PHL}	Open
t_{PLZ}/t_{PZL}	V_{CC}
t_{PHZ}/t_{PZH}	GND

V_{CC}	Inputs		V_M	C_L
	V_I	t_r/t_f		
2.0V	V_{CC}	6ns	$V_{CC}/2$	50pF
4.5V	V_{CC}	6ns	$V_{CC}/2$	50pF
6.0V	V_{CC}	6ns	$V_{CC}/2$	50pF

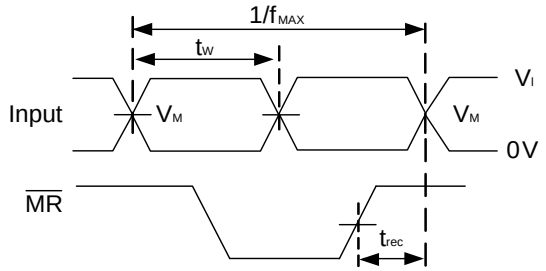

Voltage Waveform
Pulse Duration and Recovery Time

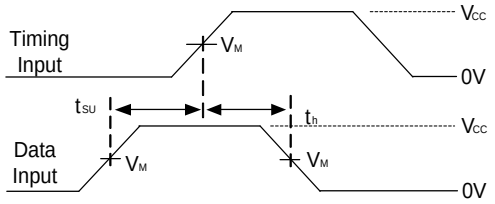

Voltage Waveform
Set-up and Hold Times

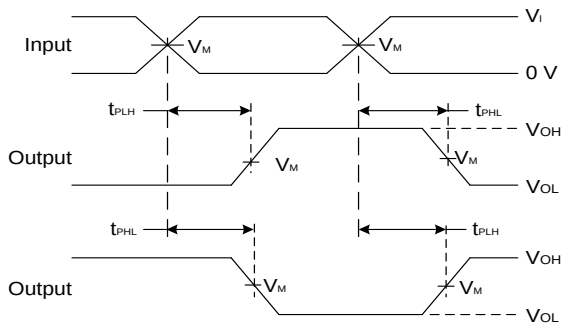

Voltage Waveform
Propagation Delay Times
Inverting and Non Inverting Outputs

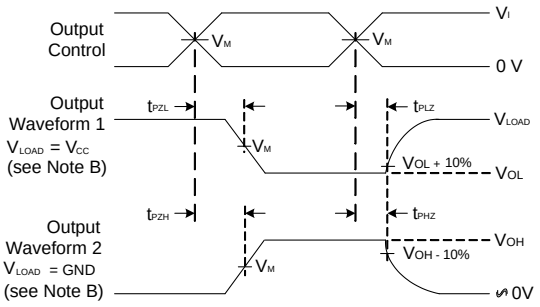

Voltage Waveform
Enable and Disable Times

Notes: A. Includes test lead and test apparatus capacitance.
B. Output Waveform 1 depends on the internal Q_N node being low and behaves in this manner based on OE pin.
Output Waveform 2 depends on the internal Q_N node being high and behaves in this manner based on OE pin.
C. All pulses are supplied at pulse repetition rate ≤ 10MHz.
D. Inputs are measured separately one transition per measurement.
E. t_{PLH} and t_{PHL} are the same as t_{PD}.

Figure 1. Load Circuit and Voltage Waveforms

© Diodes Incorporated

Ordering Information

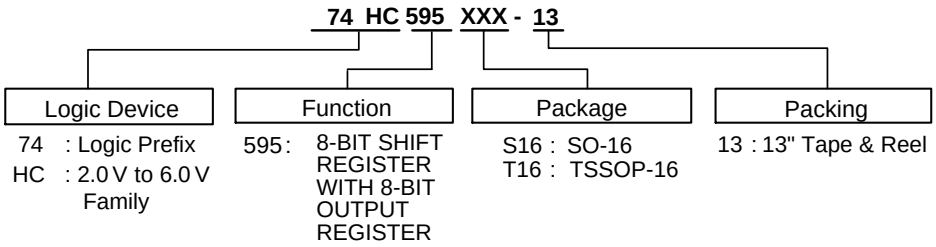

Part Number	Package Code	Packaging	7" Tape and Reel (Note 6)	
			Quantity	Part Number Suffix
74HC595S16-13	S16	SO-16	2500/Tape & Reel	-13
74HC595T16-13	T16	TSSOP-16	2500/Tape & Reel	-13

Note: 6. The taping orientation is located on our website at http://www.diodes.com/datasheets/ap02007.pdf.

Marking Information

(1) SO-16, TSSOP16

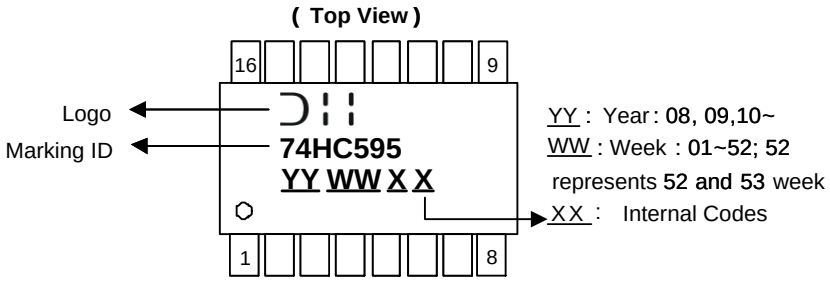

Part Number	Package
74HC595S16	SO-16
74HC595T16	TSSOP-16

© Diodes Incorporated

Package Outline Dimensions (All dimensions in mm.)

Please see http://www.diodes.com/package-outlines.html for the latest version.

Package Type: SO-16

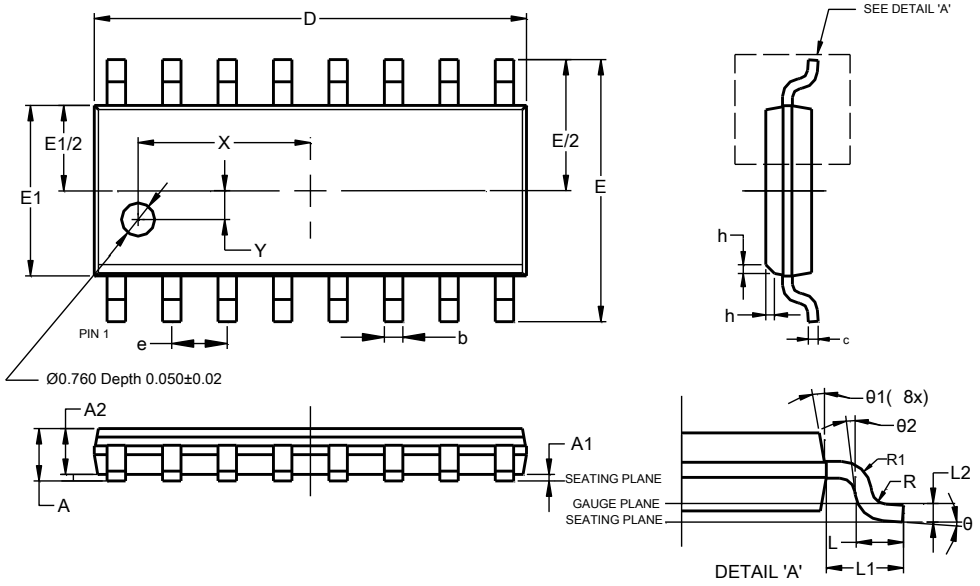

SO-16			
Dim	**Min**	**Max**	**Typ**
A	--	1.260	--
A1	0.10	0.23	--
A2	1.02	--	--
b	0.31	0.51	--
c	0.10	0.25	--
D	9.80	10.00	--
E	5.90	6.10	--
E1	3.80	4.00	--
e	1.27 BSC		
h	0.15	0.25	0.20
L	0.40	1.27	--
L1	1.04 REF		
L2	0.25 BSC		
R	0.07	--	--
R1	0.07	--	--
X	3.945 REF		
Y	0.661 REF		
θ	0°	8°	--
θ1	5°	15°	--
θ2	0°	--	--
All Dimensions in mm			

Package Type: TSSOP-16

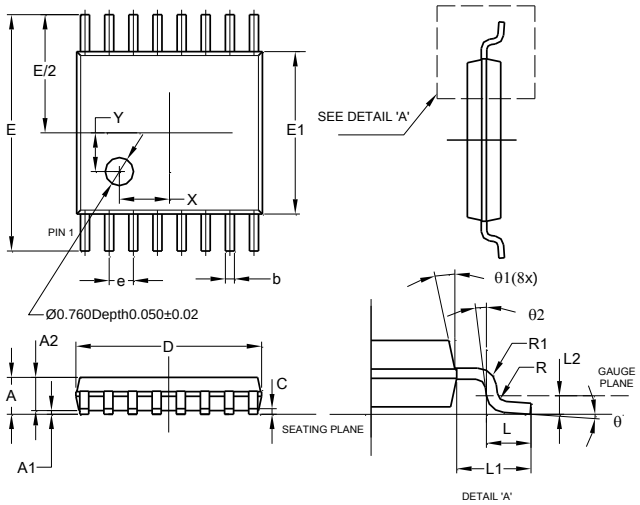

TSSOP-16			
Dim	**Min**	**Max**	**Typ**
A	-	1.08	-
A1	0.05	0.15	-
A2	0.80	0.93	-
b	0.19	0.30	-
c	0.09	0.20	-
D	4.90	5.10	-
E	6.40 BSC		
E1	4.30	4.50	-
e	0.65 BSC		
L	0.45	0.75	-
L1	1.00 REF		
L2	0.25 BSC		
R / R1	0.09	-	-
X	-	-	1.350
Y	-	-	1.050
θ	0°	8°	-
θ1	5°	15°	-
θ2	0°	-	-
All Dimensions in mm			

© Diodes Incorporated

Suggested Pad Layout

Please see http://www.diodes.com/package-outlines.html for the latest version.

Package Type: SO-16

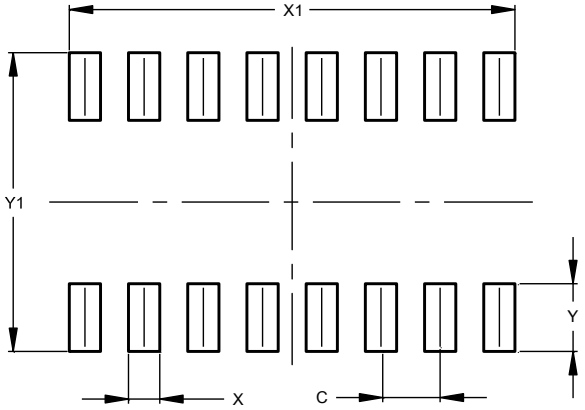

Dimensions	Value (in mm)
C	1.270
X	0.670
X1	9.560
Y	1.450
Y1	6.400

Package Type: TSSOP-16

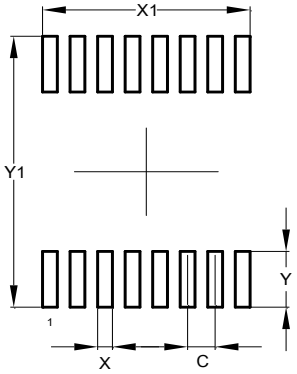

Dimensions	Value (in mm)
C	0.650
X	0.350
X1	4.900
Y	1.400
Y1	6.800

© Diodes Incorporated

IMPORTANT NOTICE

DIODES INCORPORATED MAKES NO WARRANTY OF ANY KIND, EXPRESS OR IMPLIED, WITH REGARDS TO THIS DOCUMENT, INCLUDING, BUT NOT LIMITED TO, THE IMPLIED WARRANTIES OF MERCHANTABILITY AND FITNESS FOR A PARTICULAR PURPOSE (AND THEIR EQUIVALENTS UNDER THE LAWS OF ANY JURISDICTION).

Diodes Incorporated and its subsidiaries reserve the right to make modifications, enhancements, improvements, corrections or other changes without further notice to this document and any product described herein. Diodes Incorporated does not assume any liability arising out of the application or use of this document or any product described herein; neither does Diodes Incorporated convey any license under its patent or trademark rights, nor the rights of others. Any Customer or user of this document or products described herein in such applications shall assume all risks of such use and will agree to hold Diodes Incorporated and all the companies whose products are represented on Diodes Incorporated website, harmless against all damages.

Diodes Incorporated does not warrant or accept any liability whatsoever in respect of any products purchased through unauthorized sales channel.
Should Customers purchase or use Diodes Incorporated products for any unintended or unauthorized application, Customers shall indemnify and hold Diodes Incorporated and its representatives harmless against all claims, damages, expenses, and attorney fees arising out of, directly or indirectly, any claim of personal injury or death associated with such unintended or unauthorized application.

Products described herein may be covered by one or more United States, international or foreign patents pending. Product names and markings noted herein may also be covered by one or more United States, international or foreign trademarks.

This document is written in English but may be translated into multiple languages for reference. Only the English version of this document is the final and determinative format released by Diodes Incorporated.

LIFE SUPPORT

Diodes Incorporated products are specifically not authorized for use as critical components in life support devices or systems without the express written approval of the Chief Executive Officer of Diodes Incorporated. As used herein:

A. Life support devices or systems are devices or systems which:

1. are intended to implant into the body, or
2. support or sustain life and whose failure to perform when properly used in accordance with instructions for use provided in the labeling can be reasonably expected to result in significant injury to the user.

B. A critical component is any component in a life support device or system whose failure to perform can be reasonably expected to cause the failure of the life support device or to affect its safety or effectiveness.

Customers represent that they have all necessary expertise in the safety and regulatory ramifications of their life support devices or systems, and acknowledge and agree that they are solely responsible for all legal, regulatory and safety-related requirements concerning their products and any use of Diodes Incorporated products in such safety-critical, life support devices or systems, notwithstanding any devices- or systems-related information or support that may be provided by Diodes Incorporated. Further, Customers must fully indemnify Diodes Incorporated and its representatives against any damages arising out of the use of Diodes Incorporated products in such safety-critical, life support devices or systems.

Copyright © 2018, Diodes Incorporated

www.diodes.com