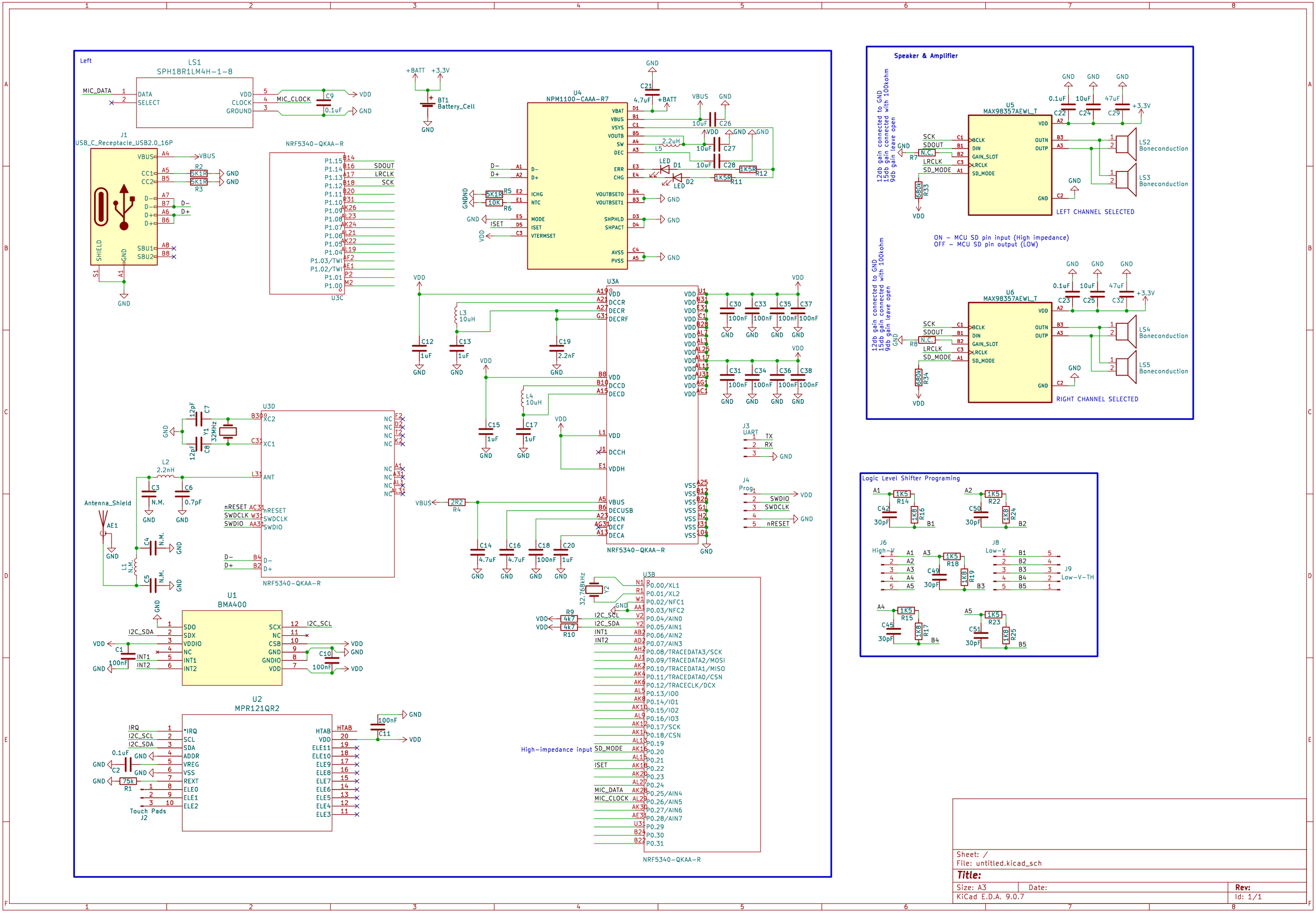
Left
LS1
SPH18R1LM4H-1-8
MIC_DATA
DATA
SELECT
VDD
CLOCK
GROUND
MIC_CLOCK
C9
0.1uF
VDD
GND
J1
USB_C_Receptacle_USB2.0_16P
VBUS
CC1
CC2
D-
D+
SHIELD
SBU1
SBU2
R2
R3
5K1R
NRF5340-QKAA-R
U3C
SDOUT
LRCLK
SCK
+BATT
+3.3V
BT1
Battery_Cell
U4
NPM1100-CAAA-R7
VBAT
VBUS
VSYS
VOUTB
SW
DEC
ERR
CHG
ICHG
NTC
MODE
ISET
VTERMSET
VOUTBSET0
VOUTBSET1
SHPHLD
SHPACT
AVSS
PVSS
C21
4.7uF
C26
10uF
C27
10uF
C28
10uF
L5
2.2uH
LED
D1
D2
R11
R12
1K5R
R5
R6
10K
U3A
DCCR
DECR
DECRF
DCCD
DECD
DCCH
VDDH
VBUS
DECUSB
DECN
DECF
DECA
NRF5340-QKAA-R
L3
10uH
L4
10uH
C12
1uF
C13
1uF
C19
2.2nF
C15
1uF
C17
1uF
C30
100nF
C33
100nF
C35
100nF
C37
100nF
C31
100nF
C34
100nF
C36
100nF
C38
100nF
J3
UART
TX
RX
J4
Prog
SWDIO
SWDCLK
nRESET
U3D
XC2
XC1
ANT
nRESET
SWDCLK
SWDIO
C7
12pF
C8
12pF
Y1
32MHz
L2
2.2nH
C3
N.M.
C6
0.7pF
Antenna_Shield
AE1
L1
N.M.
C4
N.M.
C5
N.M.
NRF5340-QKAA-R
U1
BMA400
SDO
SDX
VDDIO
NC
INT1
INT2
SCX
CSB
GNDIO
C1
100nF
C10
100nF
I2C_SDA
I2C_SCL
U2
MPR121QR2
IRQ
*IRQ
SCL
SDA
ADDR
VREG
VSS
REXT
ELE0
ELE1
ELE2
HTAB
VDD
ELE11
ELE10
ELE9
ELE8
ELE7
ELE6
ELE5
ELE4
ELE3
C2
0.1uF
R1
75k
Touch Pads
J2
C11
100nF
U3B
32.768kHz
Y2
R9
4k7
R10
4k7
I2C_SCL
I2C_SDA
INT1
INT2
High-impedance input
SD_MODE
ISET
MIC_DATA
MIC_CLOCK
P0.00/XL1
P0.01/XL2
P0.02/NFC1
P0.03/NFC2
P0.04/AIN0
P0.05/AIN1
P0.06/AIN2
P0.07/AIN3
P0.08/TRACEDATA3/SCK
P0.09/TRACEDATA2/MOSI
P0.10/TRACEDATA1/MISO
P0.11/TRACEDATA0/CSN
P0.12/TRACECLK/DCX
P0.13/IO0
P0.14/IO1
P0.15/IO2
P0.16/IO3
P0.17/SCK
P0.18/CSN
P0.19
P0.20
P0.21
P0.22
P0.23
P0.24
P0.25/AIN4
P0.26/AIN5
P0.27/AIN6
P0.28/AIN7
P0.29
P0.30
P0.31
NRF5340-QKAA-R
Speaker & Amplifier
12db gain connected to GND
15db gain connected with 100kohm
9db gain leave open
U5
MAX98357AEWL_T
SCK
SDOUT
N.C.
LRCLK
SD_MODE
BCLK
DIN
GAIN_SLOT
LRCLK
SD_MODE
OUTN
OUTP
LS2
Boneconduction
LS3
Boneconduction
LEFT CHANNEL SELECTED
ON - MCU SD pin input (High impedance)
OFF - MCU SD pin output (LOW)
U6
MAX98357AEWL_T
LS4
Boneconduction
LS5
Boneconduction
RIGHT CHANNEL SELECTED
Logic Level Shifter Programing
J6
High-V
J8
Low-V
J9
Low-V-TH
1K5
1K8
30pF
Sheet: /
File: untitled.kicad_sch
Title:
Size: A3
Date:
Rev:
KiCad E.D.A. 9.0.7
Id: 1/1