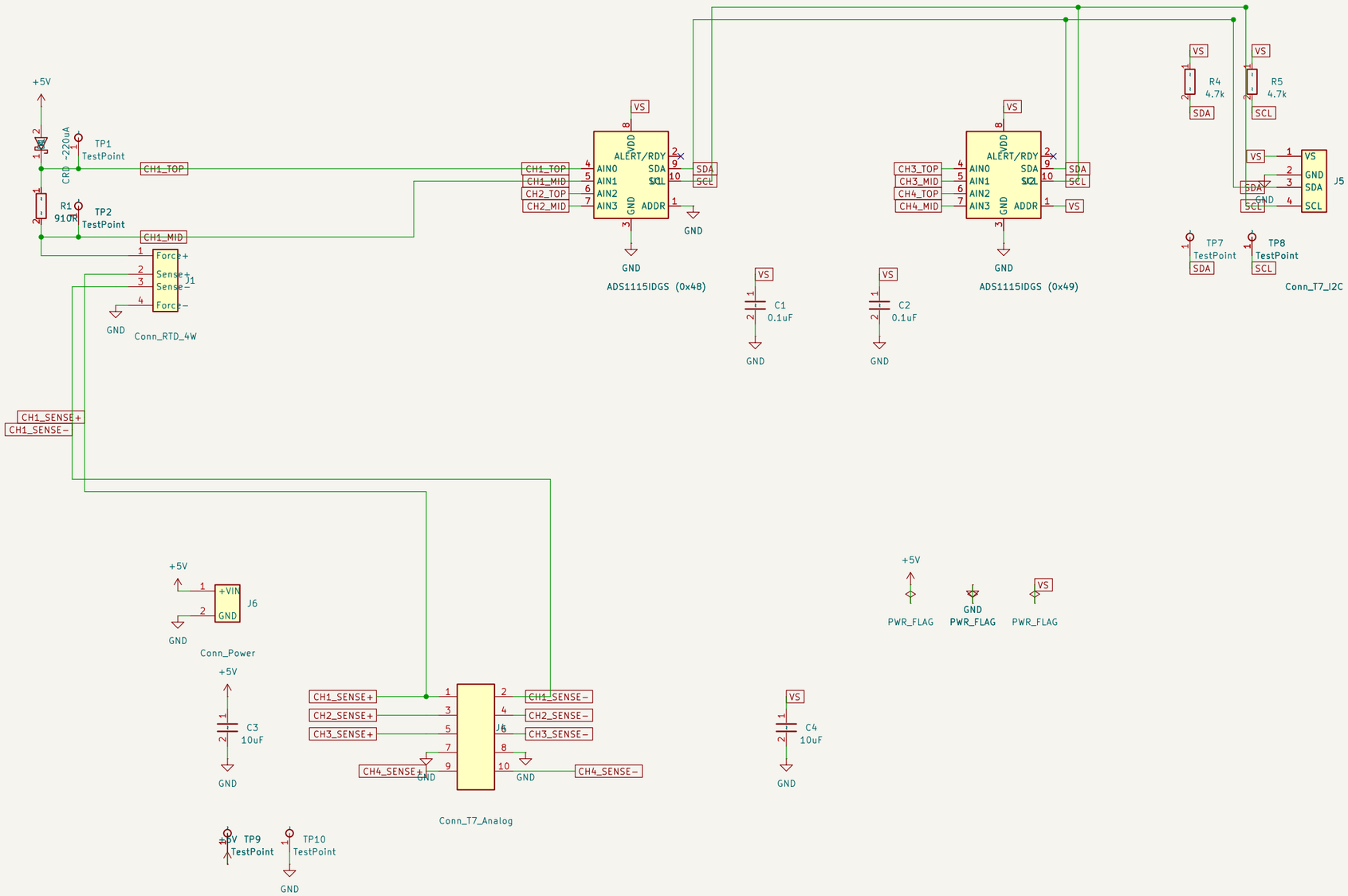


AUDIT PAGE: full CH1 signal chain on this page — +5V > CRD D1 > R_ref R1 (V_ref taps CH1_TOP/CH1_MID > U1 ADS1115 AIN0/AIN1) > RTD J1 (Kelvin: Force via loop, Sense pair > J4 > T7) > GND.
CH2–CH4 (pages 2–4) are identical unit cells; TOP/MID taps land on U1 AIN2/3 (CH2), U2 AIN0/1 (CH3), U2 AIN2/3 (CH4); Sense pairs land on J4 (CH4 on pins 9/10) by the CHn_* labels.
ACCEPTED DEVIATION: CH2–CH4 are separate copies — a unit-cell change must be applied to CH1 (this page) AND pages 2–4 by hand. See docs/sessions/trackE.md.

unit_cell_ch2

File: unit_cell_ch2.kicad_sch

unit_cell_ch3

File: unit_cell_ch3.kicad_sch

unit_cell_ch4

File: unit_cell_ch4.kicad_sch

Pages 2–4: CH2–CH4 unit cells (separate copies — edit all four by hand)
Page 1: CH1 unit cell + acquisition + power/IO, drawn wires (audit view)

Sheet: /
File: rtd-readout.kicad_sch

**Title: RTD Readout — 4ch 4-wire RTD, ratiometric**

| | | |
|---|---|---|
| Size: A3 | Date: | Rev: B |
| KiCad E.D.A. 10.0.3 | | Id: 1/4 |

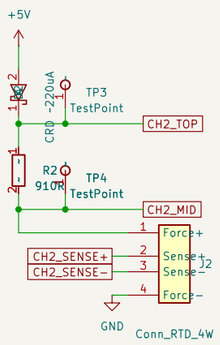


Sheet: /unit_cell_ch2/
File: unit_cell_ch2.kicad_sch

**Title: RTD Readout – unit cell CH2**

| | | |
|---|---|---|
| Size: A3 | Date: | Rev: B |
| KiCad E.D.A. 10.0.3 | | Id: 2/4 |

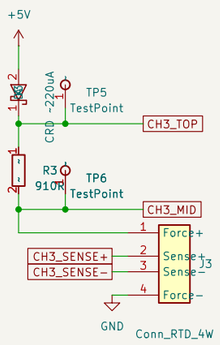


Sheet: /unit_cell_ch3/
File: unit_cell_ch3.kicad_sch

**Title: RTD Readout – unit cell CH3**

| | | |
|---|---|---|
| Size: A3 | Date: | Rev: B |
| KiCad E.D.A. 10.0.3 | | Id: 3/4 |

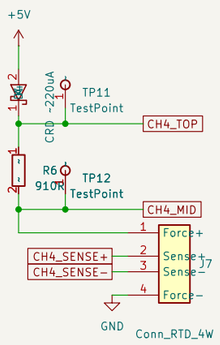


Sheet: /unit_cell_ch4/
File: unit_cell_ch4.kicad_sch

**Title: RTD Readout – unit cell CH4**

| | | |
|---|---|---|
| Size: A3 | Date: | Rev: B |
| KiCad E.D.A. 10.0.3 | | Id: 4/4 |