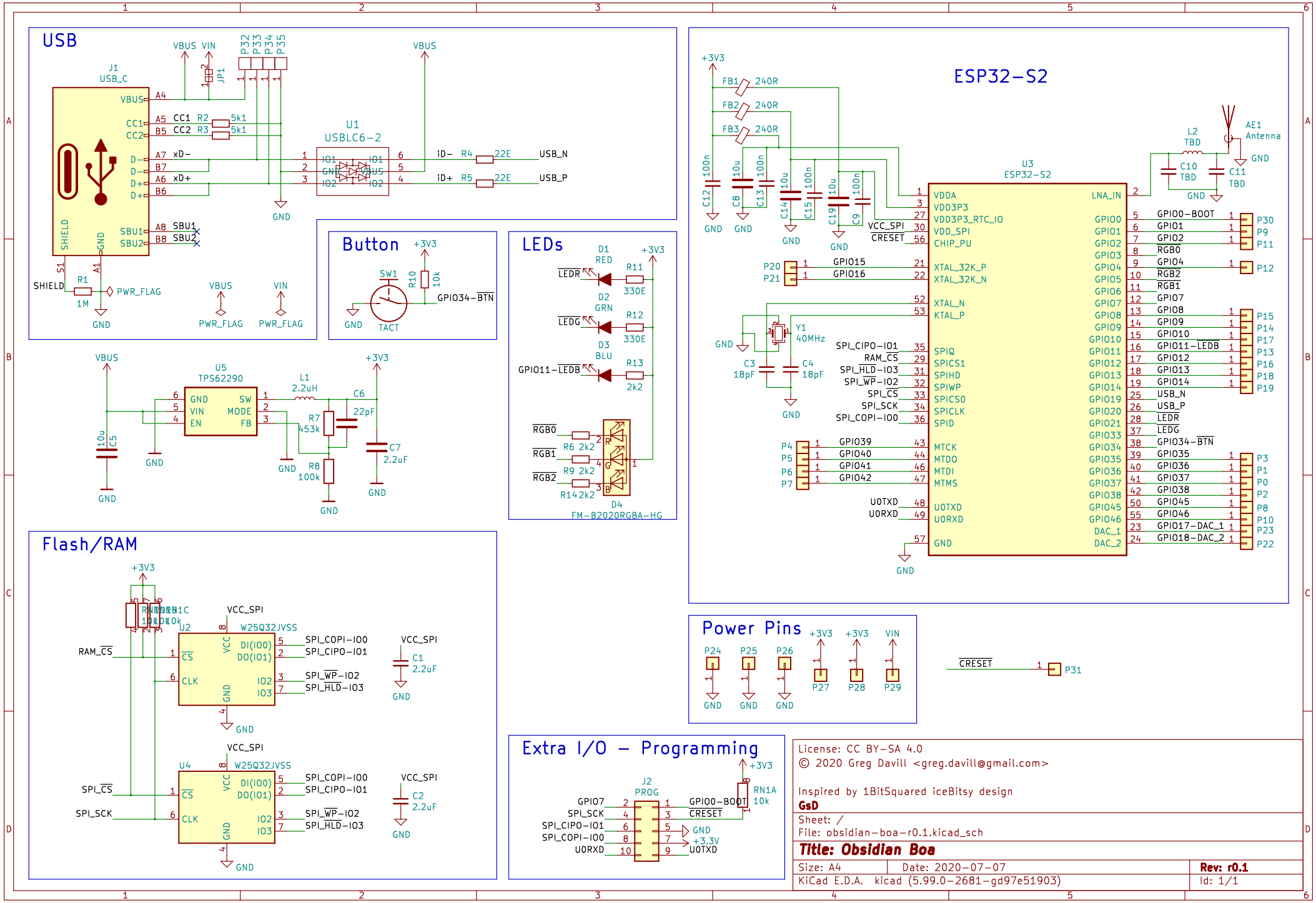

License: CC BY-SA 4.0
© 2020 Greg Davill <greg.davill@gmail.com>

Inspired by 1BitSquared iceBitsy design

GsD

Sheet: /
File: obsidian-boa-r0.1.kicad_sch

Title: Obsidian Boa

Size: A4	Date: 2020-07-07	**Rev: r0.1**
KiCad E.D.A. kicad (5.99.0-2681-gd97e51903)		Id: 1/1