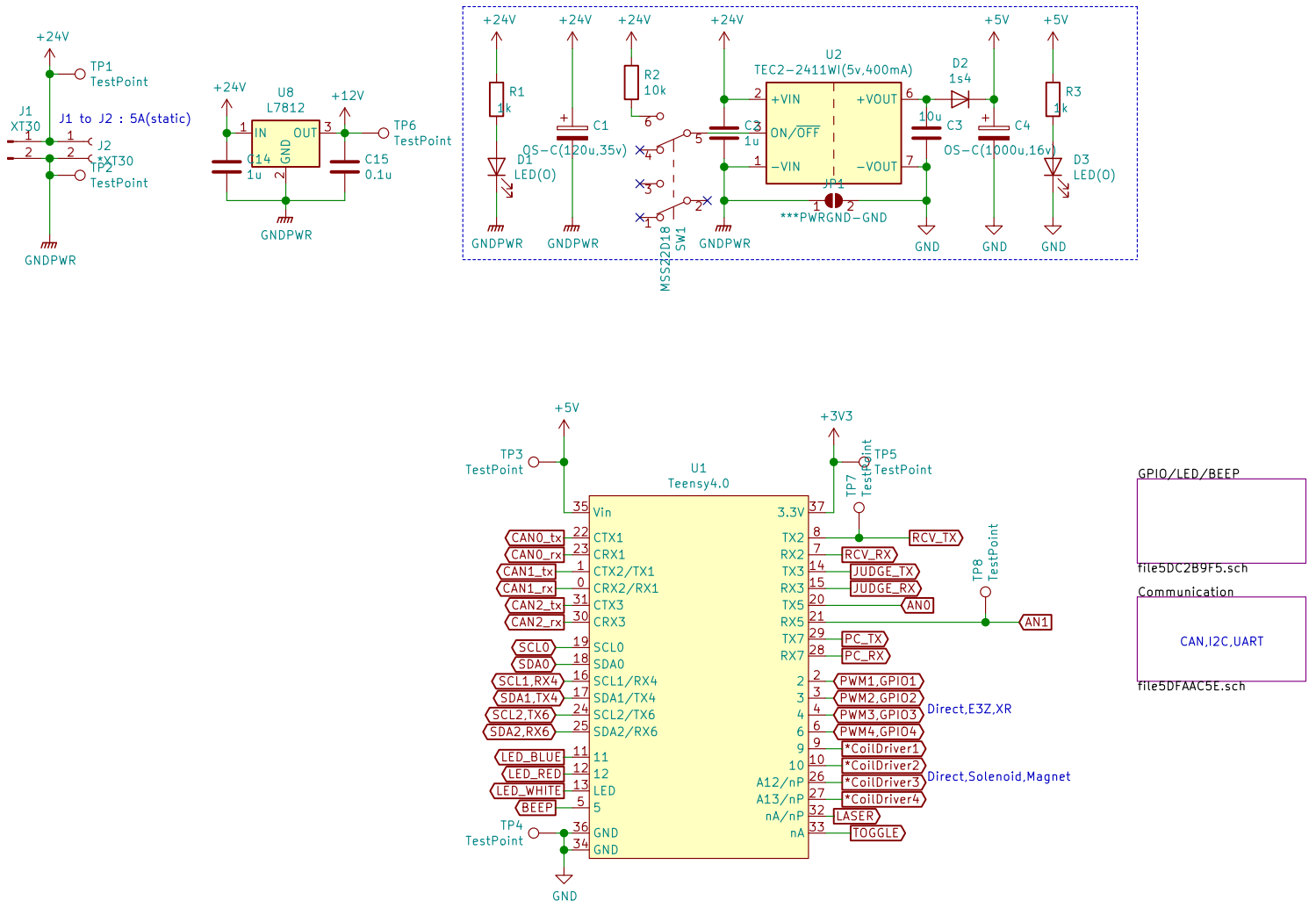

Sheet: /
File: myteensy4.0test.sch

Title:

Size: A4	Date:	**Rev:**
KiCad E.D.A. kicad (5.1.2)-1		Id: 1/3

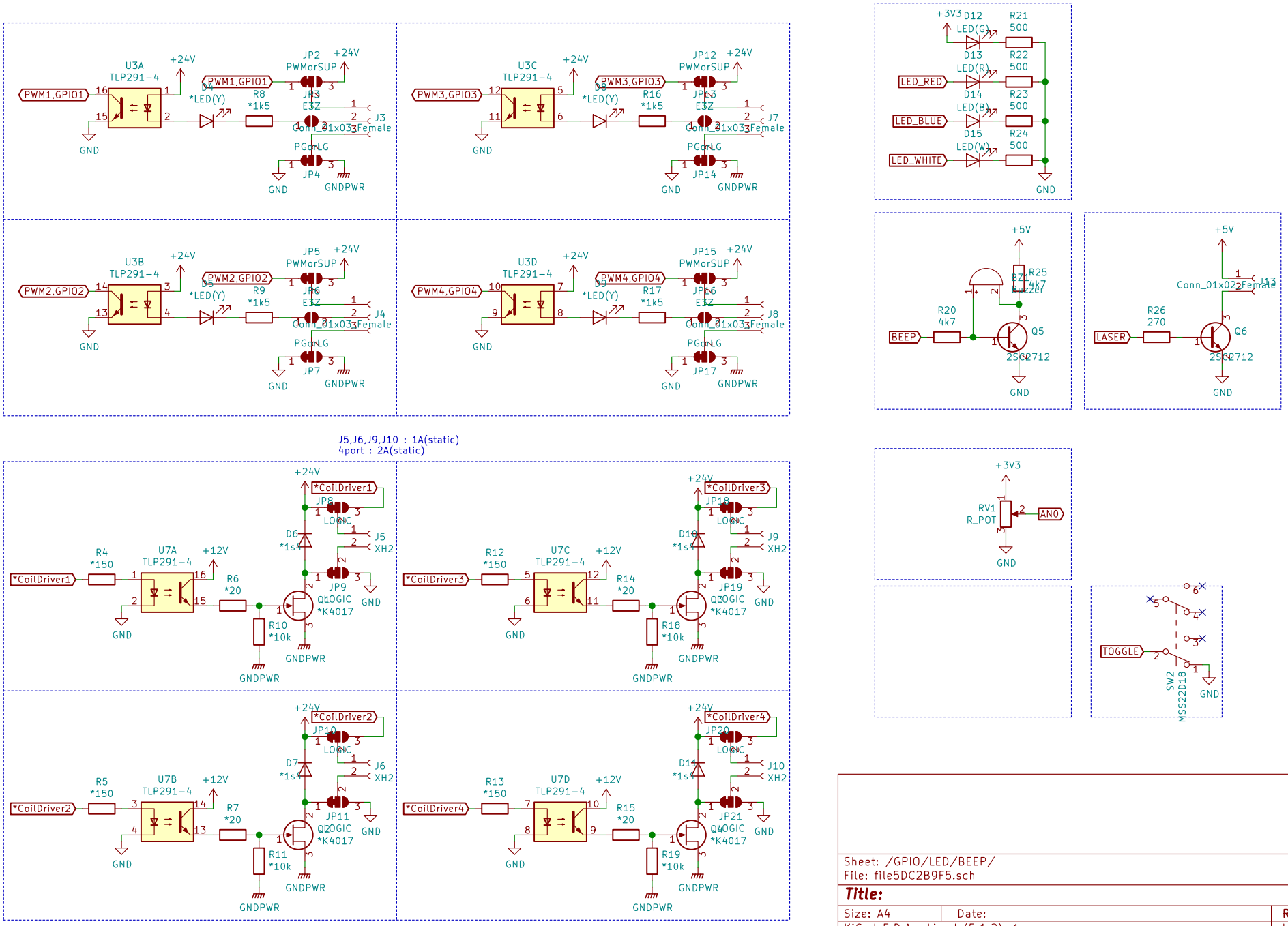

Sheet: /GPIO/LED/BEEP/
File: file5DC2B9F5.sch

Title:

Size: A4	Date:	Rev:
KiCad E.D.A. kicad (5.1.2)-1		Id: 2/3

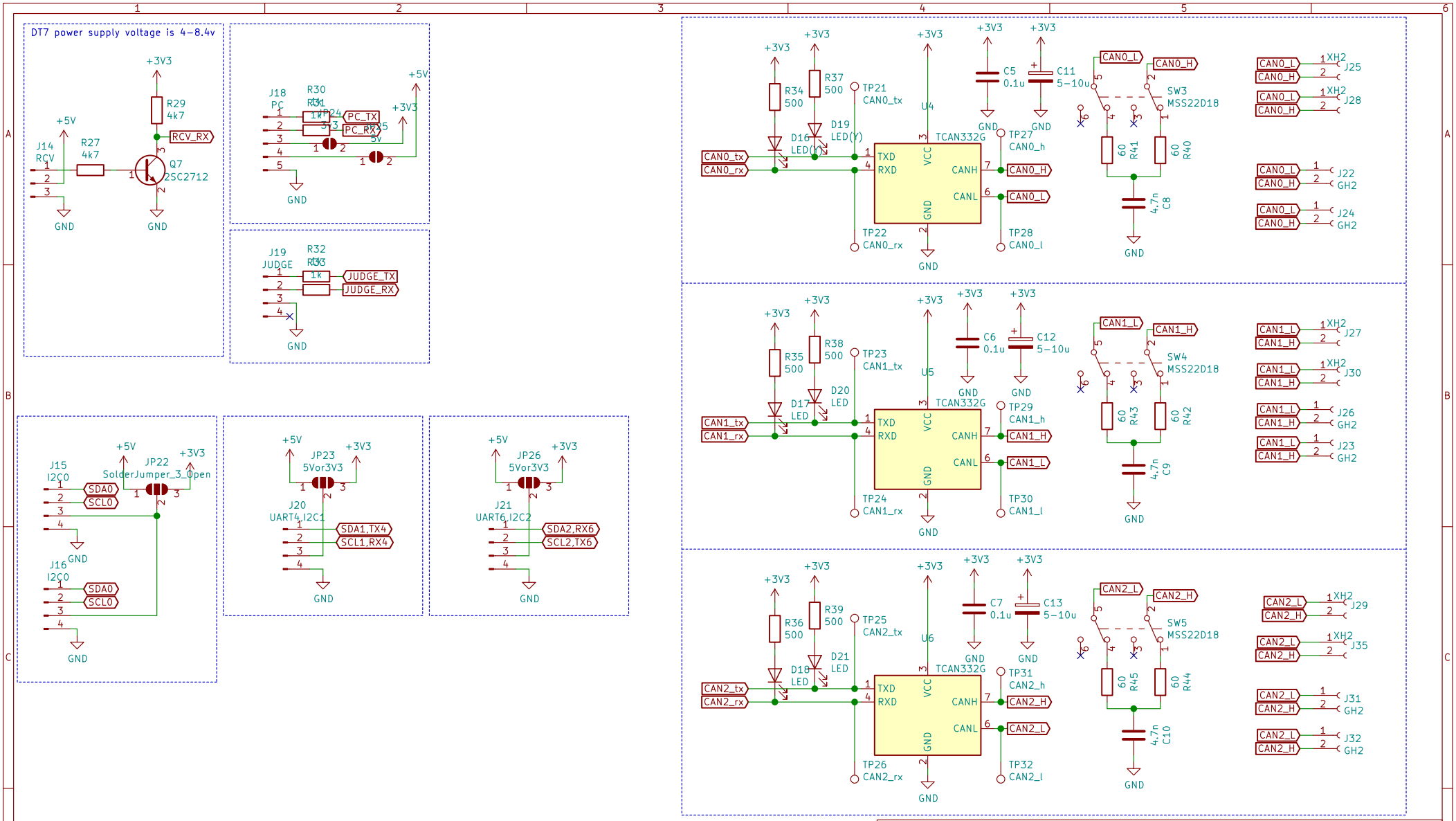

Sheet: /Communication/
File: file5DFAAC5E.sch

Title:

Size: A4	Date:	Rev:
KiCad E.D.A. kicad (5.1.2)-1		Id: 3/3