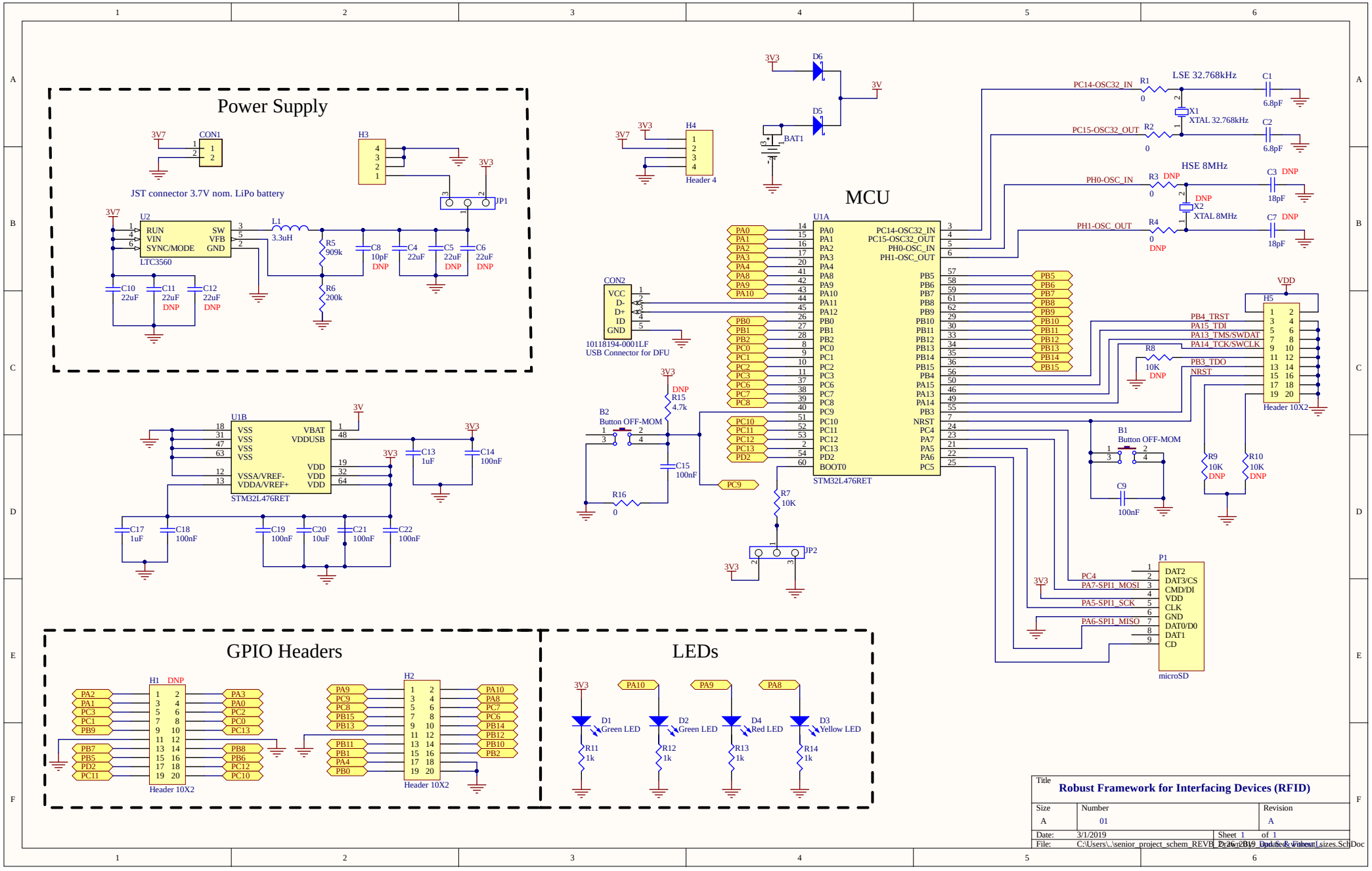
Power Supply
JST connector 3.7V nom. LiPo battery
CON1
H3
JP1
U2
RUN
VIN
SYNC/MODE
SW
VFB
GND
LTC3560
L1
3.3uH
R5
909k
R6
200k
C8
10pF
DNP
C4
22uF
C5
22uF
DNP
C6
22uF
DNP
C10
22uF
C11
22uF
DNP
C12
22uF
DNP
3V7
3V3
U1B
STM32L476RET
VSS
VBAT
VDDUSB
VDD
VSSA/VREF-
VDDA/VREF+
3V
C13
1uF
C14
100nF
C17
1uF
C18
100nF
C19
100nF
C20
10uF
C21
100nF
C22
100nF
GPIO Headers
H1
DNP
Header 10X2
H2
Header 10X2
LEDs
D1
Green LED
D2
Green LED
D4
Red LED
D3
Yellow LED
R11
1k
R12
1k
R13
1k
R14
1k
PA10
PA9
PA8
MCU
U1A
STM32L476RET
PC14-OSC32_IN
PC15-OSC32_OUT
PH0-OSC_IN
PH1-OSC_OUT
LSE 32.768kHz
X1
XTAL 32.768kHz
C1
6.8pF
C2
6.8pF
R1
0
R2
0
HSE 8MHz
R3
DNP
0
X2
XTAL 8MHz
R4
0
DNP
C3
DNP
18pF
C7
DNP
18pF
D6
D5
BAT1
H4
Header 4
CON2
VCC
D-
D+
ID
GND
10118194-0001LF
USB Connector for DFU
B2
Button OFF-MOM
DNP
R15
4.7k
C15
100nF
R16
0
PC9
R7
10K
JP2
B1
Button OFF-MOM
C9
100nF
R8
10K
DNP
R9
10K
DNP
R10
10K
DNP
H5
Header 10X2
VDD
PB4_TRST
PA15_TDI
PA13_TMS/SWDAT
PA14_TCK/SWCLK
PB3_TDO
NRST
P1
microSD
DAT2
DAT3/CS
CMD/DI
VDD
CLK
GND
DAT0/D0
DAT1
CD
PC4
PA7-SPI1_MOSI
PA5-SPI1_SCK
PA6-SPI1_MISO
Title
Robust Framework for Interfacing Devices (RFID)
Size
A
Number
01
Revision
A
Date:
3/1/2019
Sheet 1 of 1
File:
C:\Users\..\senior_project_schem_REVB_Drawing1.SchDoc
Drawn By:
Date & Time
Without sizes.SchDoc