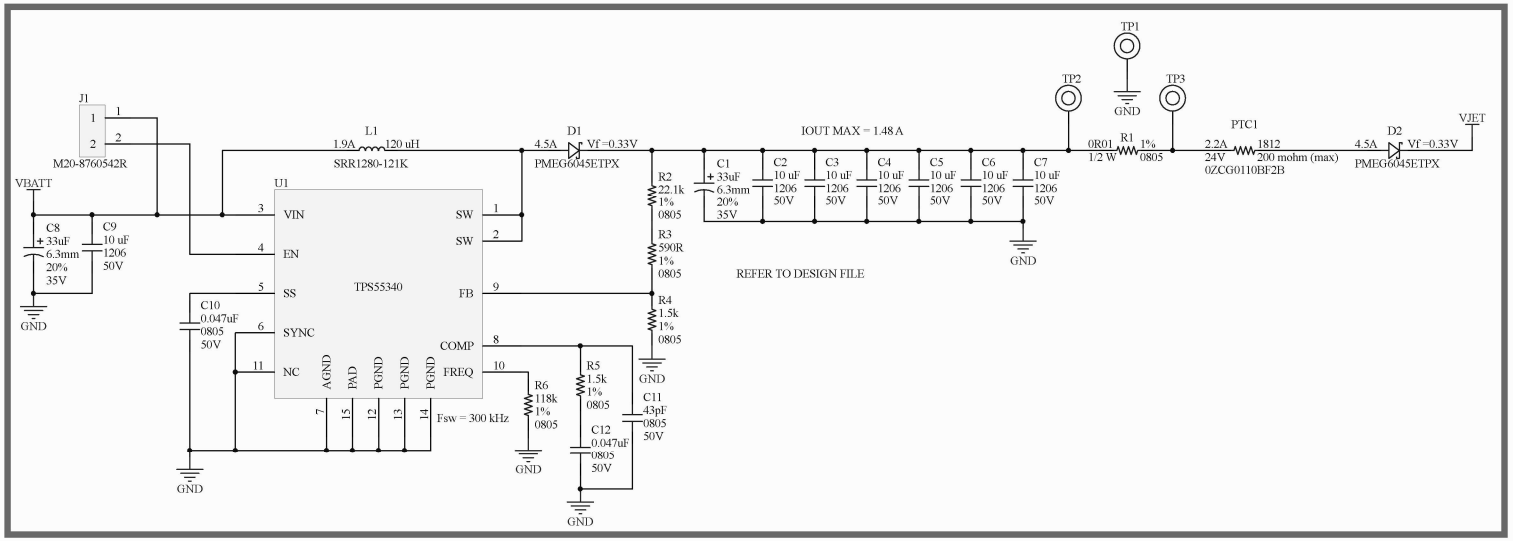

Sheet Name	**Boost 19V**		
Project Title	**PowerTree**		
Global Project	***SecurBot***		
Size: 11x17	Group: SecurBot		Revision: 1
Date: 12/03/2019	Sheet: 7 of 7		
Filename: Buck Boost 19V.SchDoc		Designers: Olivier Belval, Philippe Marcoux	