PowerTree

SecurBot

SecurBot

Revision 1

Date : 12/03/2019

Revision history	

Package size conversion	
Metric	*Imperial*
1005	0402
1608	0603
2012	0805
3216	1206
3225	1210
6432	2512

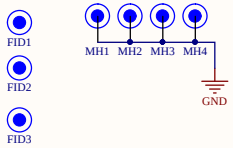

Project Title	PowerTree		
Global Project	*SecurBot*		
Size: 11x17	Group: SecurBot		Revision: 1
Date: 12/03/2019	Sheet: 1 of 7		
Filename: Title.SchDoc	Designers: Olivier Belval, Philippe Marcoux		

5V 2A

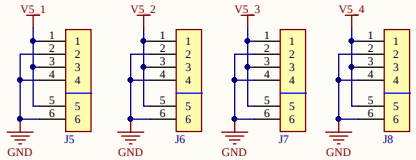

12V 8A

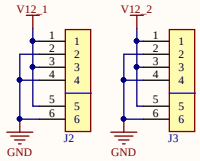

Robot base (VBAT)

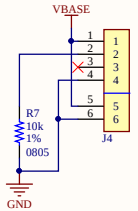

Variable 1A

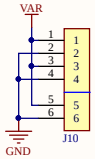

19V

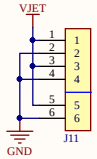

Direct Input (19V)

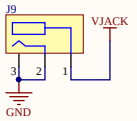

Battery Input (14.8V)

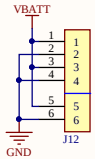

Reverse Current Protection

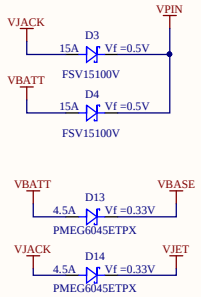

Sheet Name	Connectors	
Project Title	PowerTree	
Global Project	*SecurBot*	
Size: 11x17	Group: SecurBot	Revision: 1
Date: 12/03/2019	Sheet: 2 of 7	
Filename: Connectors.SchDoc	Designers: Olivier Belval, Philippe Marcoux	

RT8284N 14.8V -> 5V

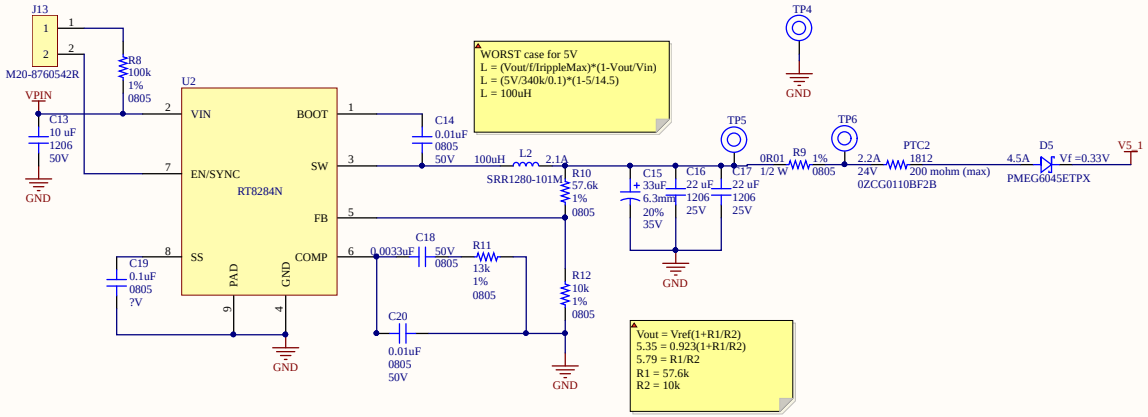

RT8284N 14.8V -> 5V

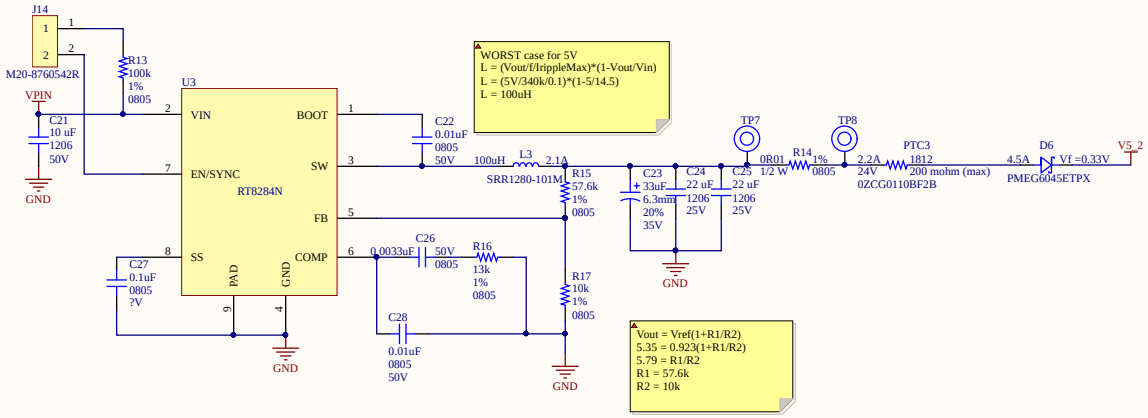

Sheet Name	5V page 1	
Project Title	PowerTree	
Global Project	*SecurBot*	
Size: Size	Group: SecurBot	Revision: 1
Date: 12/03/2019	Sheet: 3 of 7	
Filename: DC_DC_5V_1.SchDoc	Designers: Olivier Belval, Philippe Marcoux	

RT8284N 14.8V -> 5V

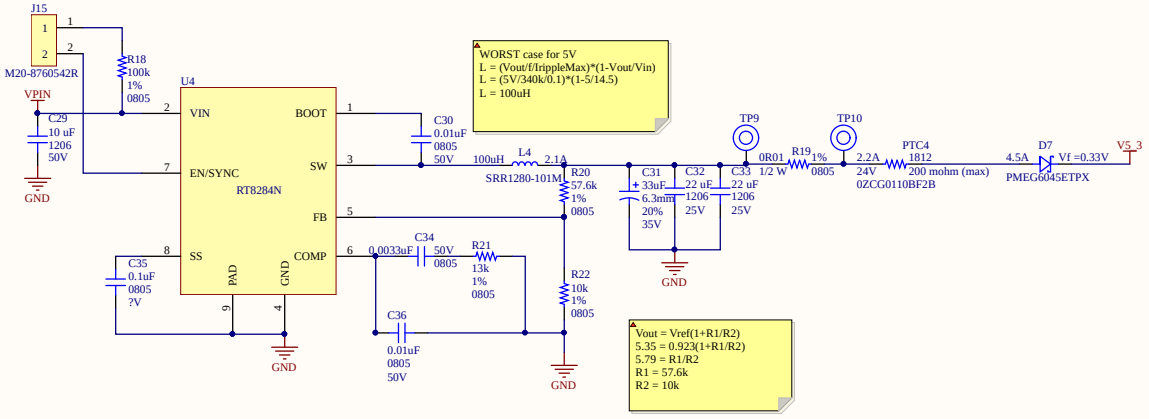

RT8284N 14.8V -> 5V

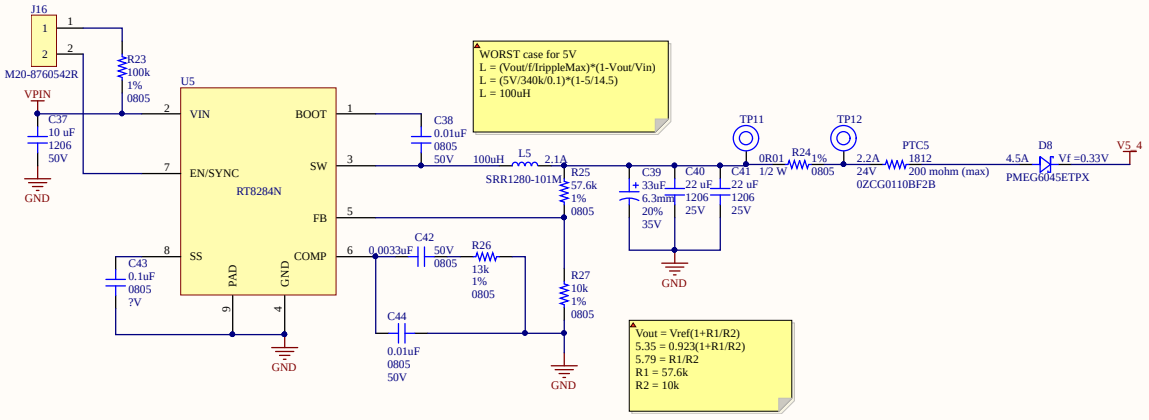

Sheet Name	5V page 2		
Project Title	PowerTree		
Global Project	*SecurBot*		
Size: 11x17	Group: SecurBot		Revision: 1
Date: 12/03/2019	Sheet: 4 of 7		
Filename: DC_DC_5V_2.SchDoc		Designers: Olivier Belval, Philippe Marcoux	

RT8284N 14.8V -> 12V

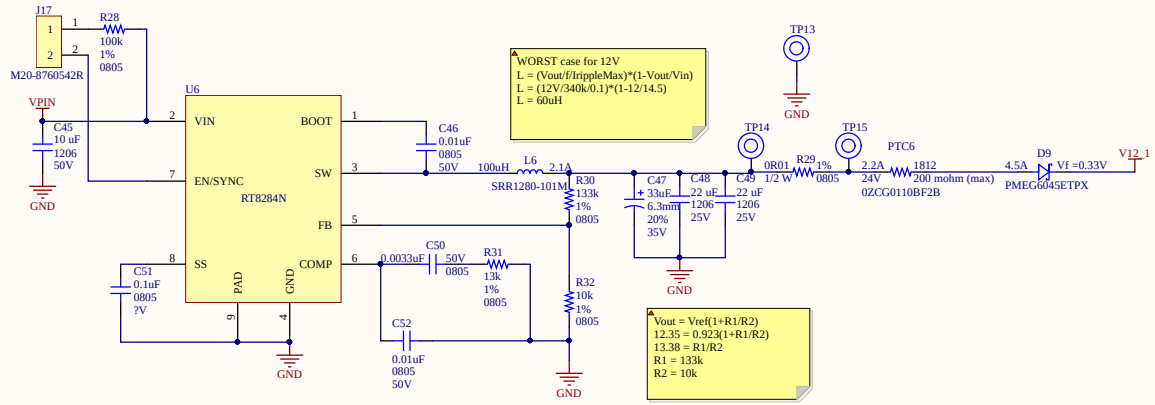

RT8284N 14.8V -> 12V

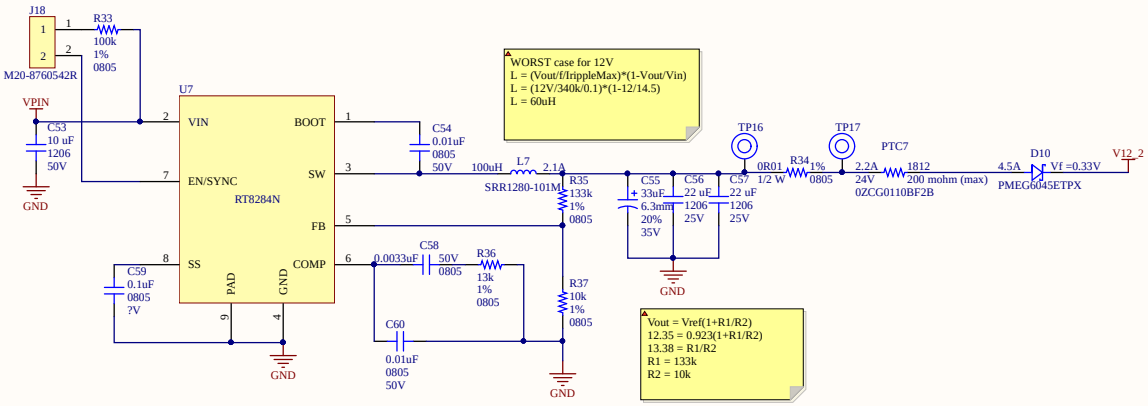

Sheet Name	12V	
Project Title	PowerTree	
Global Project	*SecurBot*	
Size: Size	Group: SecurBot	Revision: 1
Date: 12/03/2019	Sheet: 5 of 7	
Filename: DC_DC_12V.SchDoc	Designers: Olivier Belval, Philippe Marcoux	

RT8284N 19V -> 15V

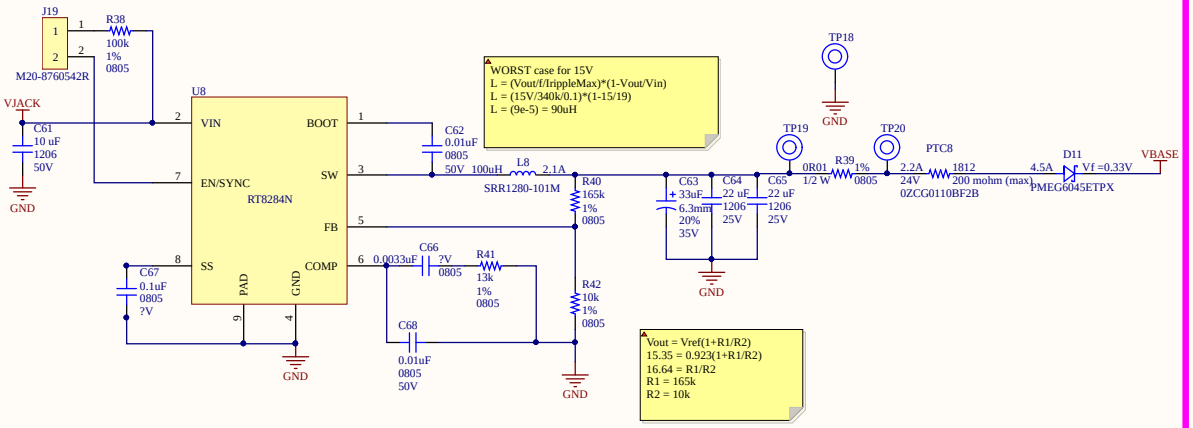

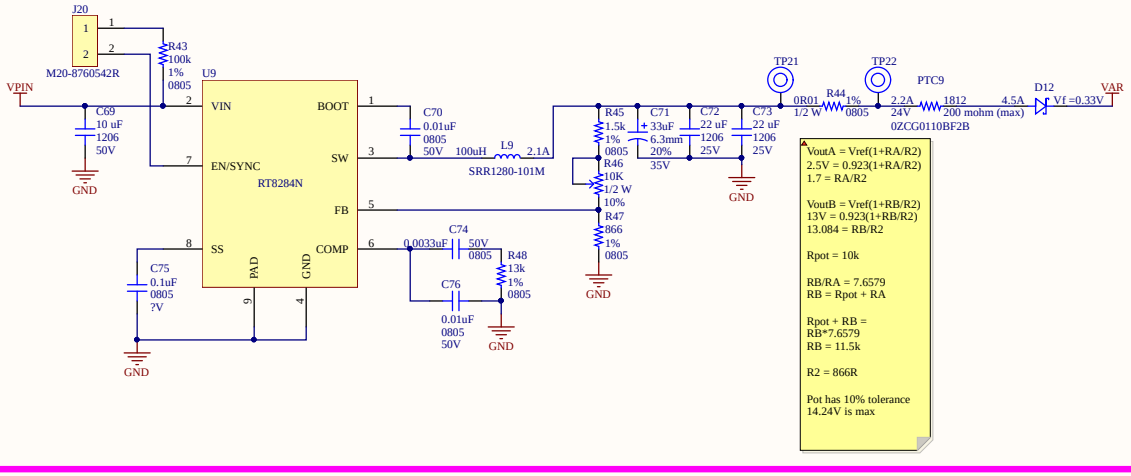

Sheet Name	15V and Variable V	
Project Title	PowerTree	
Global Project	*SecurBot*	
Size: 11x17	Group: SecurBot	Revision: 1
Date: 12/03/2019	Sheet: 6 of 7	
Filename: DC_DC_15V_AND_VAR.SchDoc	Designers: Olivier Belval, Philippe Marcoux	

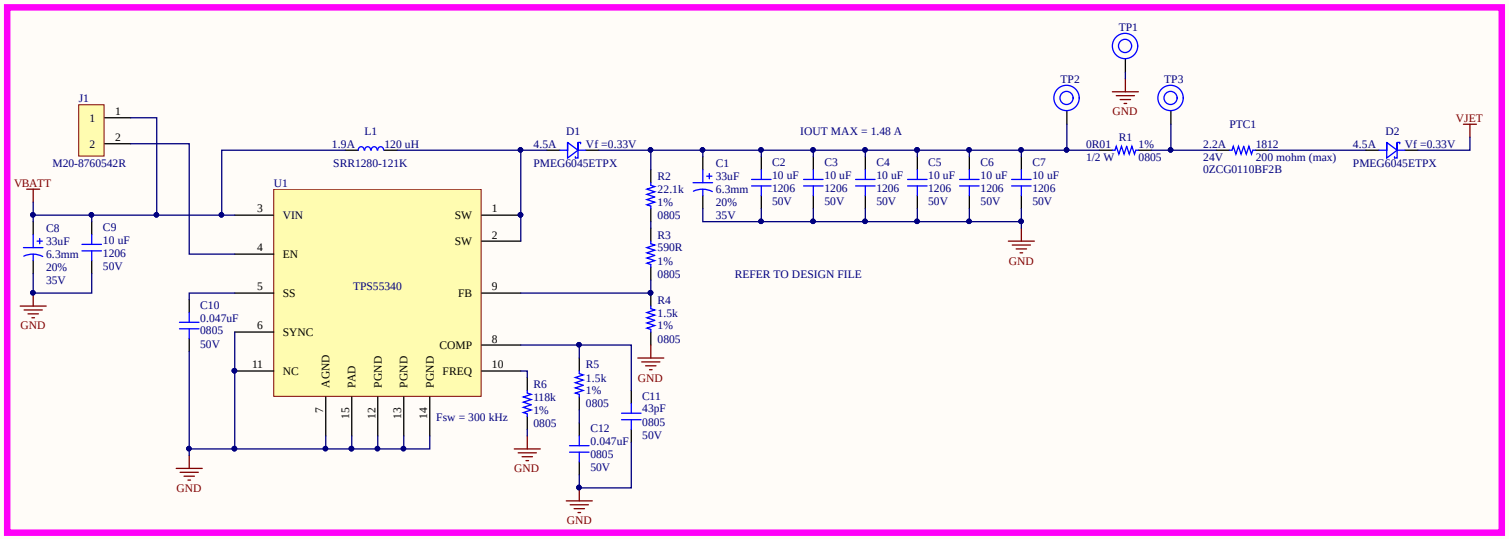

Sheet Name	Boost 19V		
Project Title	PowerTree		
Global Project	*SecurBot*		
Size: 11x17	Group: SecurBot		Revision: 1
Date: 12/03/2019	Sheet: 7 of 7		
Filename: Buck Boost 19VSchDoc		Designers: Olivier Belval, Philippe Marcoux	

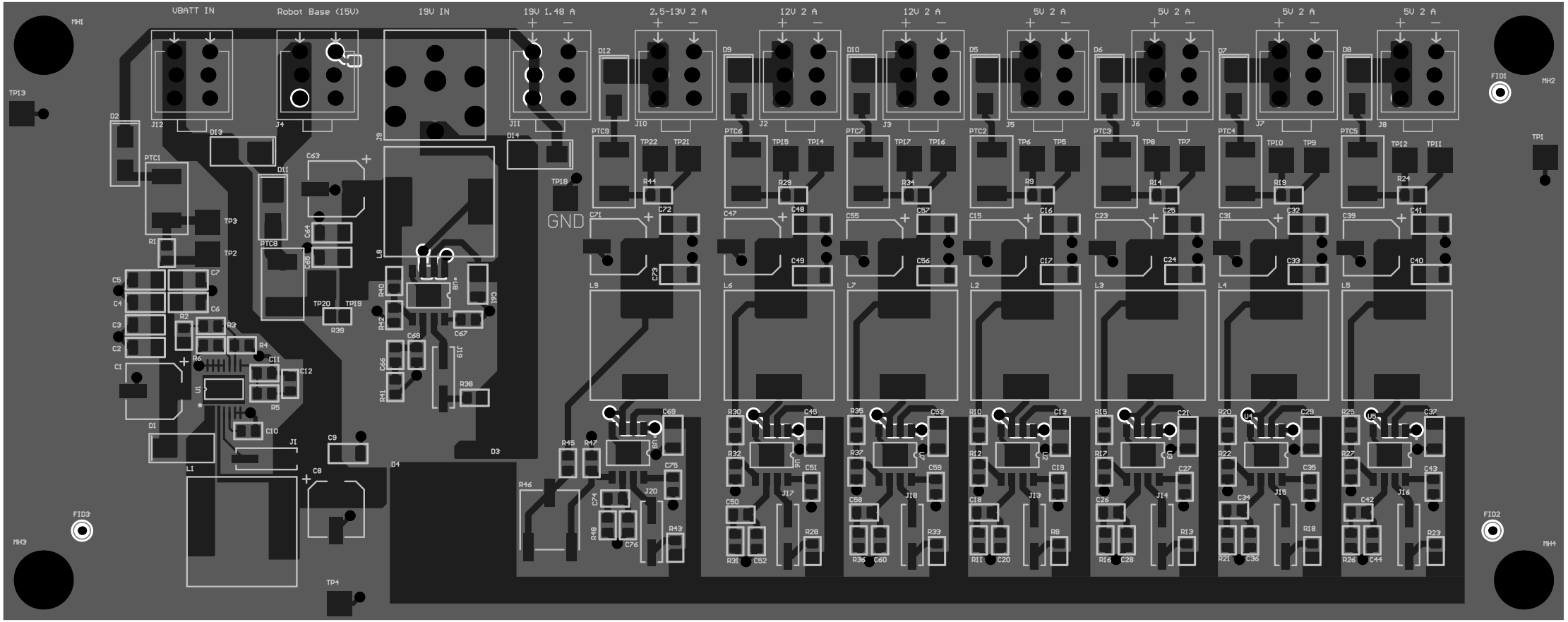
VBATT IN
Robot Base (15V)
19V IN
19V 1.48 A
2.5-13V 2 A
12V 2 A
12V 2 A
5V 2 A
5V 2 A
5V 2 A
5V 2 A
GND
MH1
MH2
MH3
MH4
FID1
FID2
FID3
TP1
TP13
TP4