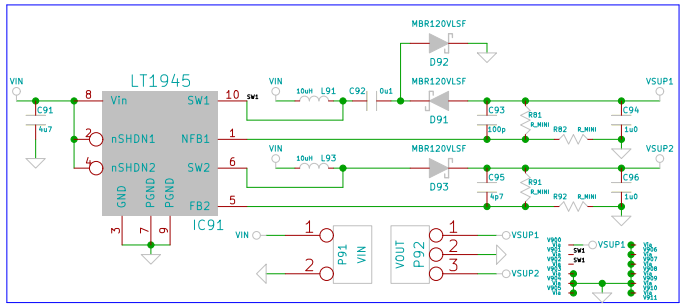

http://www.opendous.org/LT1945
Analog Front-End for Biopotential Measurements
Copyright Under the Creative Commons Attribution License
http://creativecommons.org/licenses/by/3.0/
Opendous Inc. (www.opendous.org)

File: LT1945.sch
Sheet: /

Title: LT1945 Development Board

Size: A4	**Date: 15 oct 2010**	**Rev: 1.2**
KiCad E.D.A.		Id: 1/1