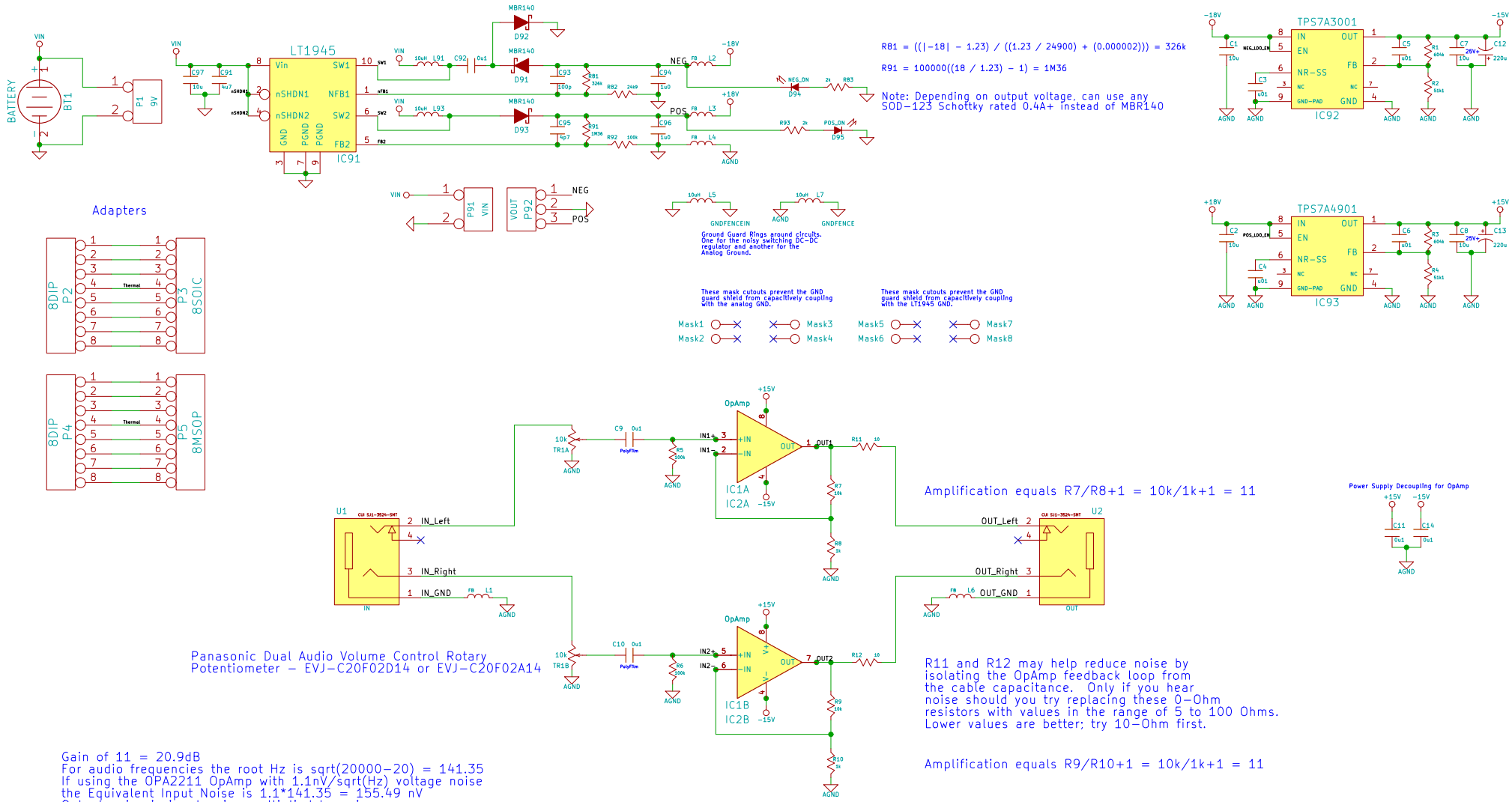

http://www.opendous.org/AudioOpAmpTester
Development Board for 8-DIP Dual Op-Amps with +/-15V Power Supply
Copyright Under the Creative Commons Attribution License
http://creativecommons.org/licenses/by/3.0/
Opendous Inc. (www.opendous.org)

File: Audio_OpAmp_Tester.sch		
Sheet: /		
Title: Audio OpAmp Tester		
Size: A4	**Date: 12 jun 2011**	**Rev: 1.0**
KiCad E.D.A.		Id: 1/1