Gear-Driven Propulsion Systems for Motorized Wheelchairs

Engineering Analysis and Design Overview

Engineering Report • April 2026

Introduction: The Role of Gears in Mobility

Mechanical gear systems are the critical interface between power generation and physical movement, specifically designed to optimize the performance of assistive mobility devices.

- **Motion Transformation**

  Converting high-speed motor rotation into high-torque wheel movement for effective propulsion.

- **User Safety**

  Ensuring stable and controlled movement across various terrains, including ramps and uneven surfaces.

- **Mechanical Advantage**

  Allowing compact, lightweight motors to move significant loads exceeding 100kg with ease.

Basic Concept of Gear Operation

Torque Multiplication

Gears mechanically increase the rotational force (torque) while proportionally decreasing the rotational speed, providing the necessary power to move heavy loads.

Power Transmission

Efficiently transferring kinetic energy from the high-speed motor shaft to the low-speed wheel axle with minimal mechanical loss.

Directional Control

Changing the axis of rotation to fit design constraints, such as the 90-degree turn utilized in worm gear configurations.

Speed Regulation

Maintaining a consistent and safe velocity regardless of variations in load or terrain inclines.

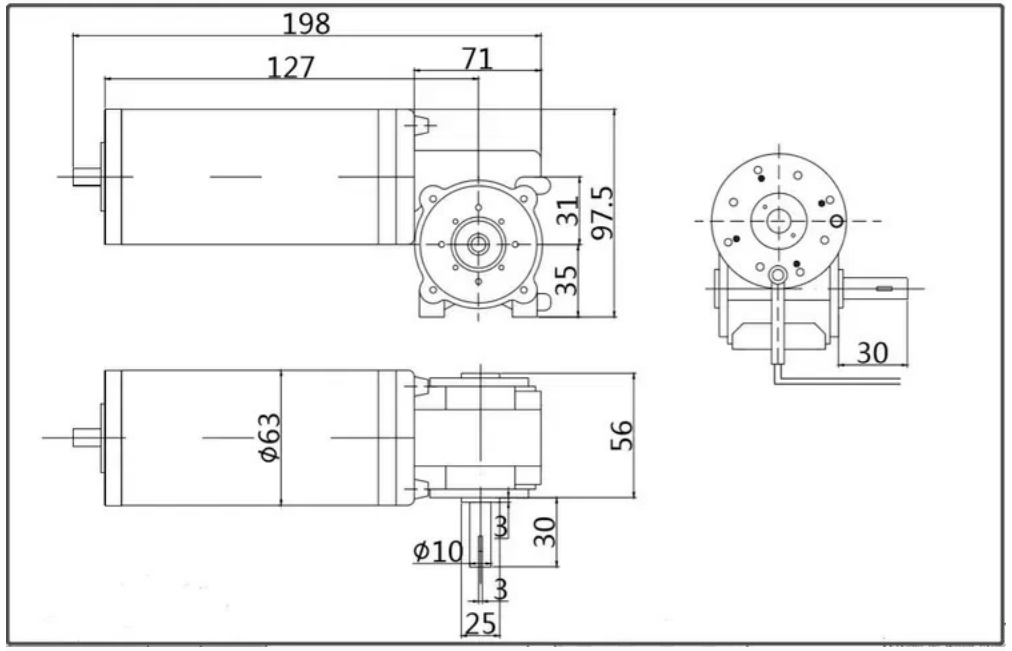

Figure 1: Technical schematic of a DC worm gear motor assembly.

Gear Selection: The Worm Gear Advantage

Worm gear systems are the industry standard for motorized wheelchairs, offering unique mechanical properties that prioritize user safety and ergonomic design.

Self-Locking

The inherent friction of the worm prevents the wheel from driving the motor. This acts as a critical safety brake, preventing the wheelchair from rolling backward on ramps if power is lost.

Compactness

Worm gears achieve high reduction ratios (e.g., 25:1 or 30:1) in a single stage. This allows for a much smaller gearbox footprint compared to multi-stage spur gear systems.

Right-Angle Drive

The 90-degree orientation allows the motor to be mounted parallel to the wheelchair frame, significantly reducing the overall width of the power module for better maneuverability.

Design Note: *While spur gears offer higher mechanical efficiency (95%+), they lack the* ***self-locking safety feature*** *and compact single-stage reduction required for assistive mobility.*

Gear Teeth and Performance Impact

MECHANICAL PRINCIPLES

$$\text{Ratio} = \text{Teeth}_{\text{Driven}} / \text{Teeth}_{\text{Driving}}$$

Speed Reduction

Output speed is inversely proportional to the gear ratio. A higher tooth count on the wheel gear results in a slower, more controlled rotation.

Torque Amplification

Output torque is directly proportional to the gear ratio. This allows a small motor to generate the massive force needed for heavy loads.

NUMERICAL EXAMPLE

Consider a standard wheelchair drive unit with a single-start worm driving a 30-tooth wheel.

Input (Worm)	1 Tooth
Output (Wheel)	30 Teeth
Calculated Gear Ratio	30:1

Resulting Performance

If the motor spins at **3,000 RPM**, the wheel rotates at **100 RPM**. Theoretical torque is increased by **30x**, providing the "punch" needed for ramp navigation.

Motor Specifications: Powering the Drive

Brushless DC (BLDC) Technology

Modern motorized wheelchairs utilize BLDC motors for their superior efficiency and reliability compared to traditional brushed variants.

- **High power-to-weight ratio for compact design**
- **Maintenance-free operation (no carbon brushes)**
- **Electronic commutation for precise speed control**
- **Reduced electromagnetic interference (EMI)**

Technical Parameters

Specification	Typical Value
Rated Voltage	24V DC
Power Rating	250W - 450W
Rated Speed (Internal)	2,500 - 3,000 RPM
Peak Efficiency	85% - 92%
Ingress Protection	IP44 / IP54

Gear Ratio and Performance Dynamics

The Speed vs. Torque Trade-off

High Ratio (e.g., 32:1)

Optimized for heavy loads and steep inclines. Provides maximum torque but limits top speed to approximately 4-5 km/h.

Low Ratio (e.g., 18:1)

Designed for faster travel on flat surfaces. Offers higher top speeds (8-10 km/h) but reduced climbing capability.

Standard Industry Selection: 20:1 to 25:1

This range provides a balanced performance profile for both indoor maneuvering and outdoor obstacles.

Figure: Integrated motor and gearbox unit for wheelchair propulsion.

Motion Transmission: From Motor to Wheel

01 Motor Rotation

The high-speed BLDC motor generates rotational energy, spinning the input shaft connected to the worm screw.

02 Worm-Wheel Meshing

The worm screw threads engage the worm wheel teeth, achieving a significant speed reduction and torque increase.

03 Axle Coupling

The driven worm wheel is securely keyed to the main drive axle, transferring the multiplied torque to the wheel assembly.

04 Wheel Rotation

The final output results in controlled, high-torque rotation of the wheelchair wheels, enabling movement across varied terrain.

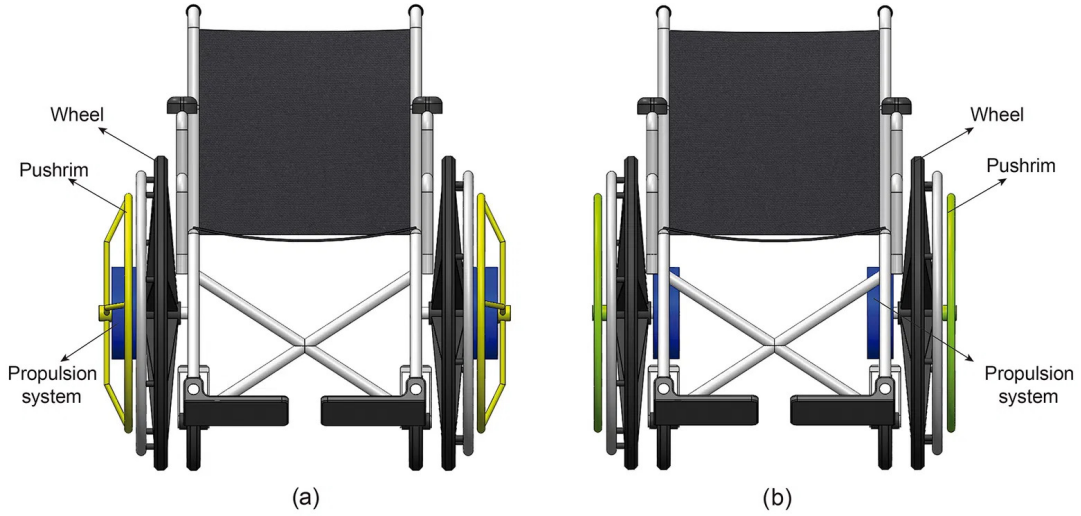

Figure 4: Mechanical schematic of the drive transmission path.

System Design Overview

01

Mechanical Layout

The physical arrangement of components designed for maximum stability and weight distribution.

- → Dual-motor differential drive
- → Rigid chassis mounting
- → Integrated transaxle units
- → Heavy-duty axle bearings

02

Control Integration

The electronic brain that translates user input into precise mechanical movement.

- → Joystick PWM signal processing
- → Closed-loop speed feedback
- → Differential steering logic
- → Battery management interface

03

Safety Systems

Redundant mechanical and electronic features to ensure user protection at all times.

- → Electromagnetic parking brakes
- → Worm gear self-locking
- → Current overload protection
- → Emergency manual release

Advantages of Gear-Driven Systems

Reliability

Robust mechanical connection with few moving parts, ensuring long-term durability and consistent performance in demanding environments.

Safety

Inherent mechanical braking through worm gear friction provides a secondary safety layer, preventing uncontrolled movement on inclines.

Customization

Gear ratios can be easily adapted during the design phase to meet specific user requirements for speed or climbing capability.

Compactness

The integrated motor-gearbox design fits within the wheel's footprint, maximizing the wheelchair's indoor maneuverability.

Cost-Effective

Utilizes proven, mature technology with established manufacturing processes, making it a reliable and affordable solution for assistive mobility.

Engineering Conclusion: *The combination of* ***mechanical advantage*** *and* ***inherent safety*** *makes gear-driven propulsion the gold standard for modern motorized wheelchairs.*

Challenges and Technical Limitations

Frictional Losses

Worm gears rely on sliding contact rather than rolling contact, leading to lower mechanical efficiency (typically 60-85%). This results in higher battery consumption and reduced range.

Wear and Tear

The continuous sliding action causes gradual degradation of the gear teeth. This necessitates high-quality lubrication and periodic maintenance to prevent system failure.

Mechanical Backlash

Small gaps between meshing teeth can develop over time, leading to "play" in the drive system. This can cause jerky starts or imprecise positioning during fine maneuvers.

Thermal Management

Energy lost to friction is converted into heat. During prolonged use on steep inclines, thermal buildup can affect lubricant viscosity and potentially damage motor seals.

Engineering Focus: Mitigating these challenges requires precision manufacturing, advanced synthetic lubricants, and robust thermal dissipation designs in the gearbox housing.

Practical Engineering Calculation

DESIGN SCENARIO

The Challenge

A motorized wheelchair must navigate a standard 10° ADA-compliant ramp with a total combined load (user + chair) of 120 kg.

System Parameters

We utilize a standard 250W BLDC motor coupled with a high-reduction worm gear assembly.

TORQUE ANALYSIS

$$T_{out} = T_{motor} \times Ratio \times Efficiency$$

Motor Torque (T_motor)	0.8 Nm
Gear Ratio	25:1
Mechanical Efficiency	70% (0.7)

Calculated Output: 14.0 Nm

This torque level provides the necessary mechanical advantage to overcome gravity and rolling resistance, ensuring a safe and steady climb.

Conclusion and Future Outlook

CURRENT STATE

Proven Reliability

Gear-driven systems remain the most robust and reliable solution for assistive mobility, offering unparalleled torque and safety.

Worm Gear Standard

The worm gear configuration provides the perfect balance of safety (self-locking) and mechanical advantage in a compact form factor.

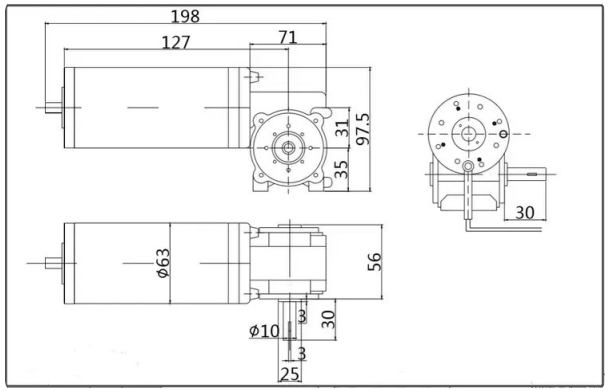

FUTURE IMPROVEMENTS

Advanced Materials

Use of high-strength polymers and advanced composites to reduce weight and noise while increasing gear lifespan.

Smart Gearboxes

Integration of electronic shifting and adaptive gear ratios to optimize performance across varied terrain and user needs.

Direct-Drive Evolution

Potential transition to high-torque direct-drive hub motors with electronic braking to replace mechanical gearsets entirely.