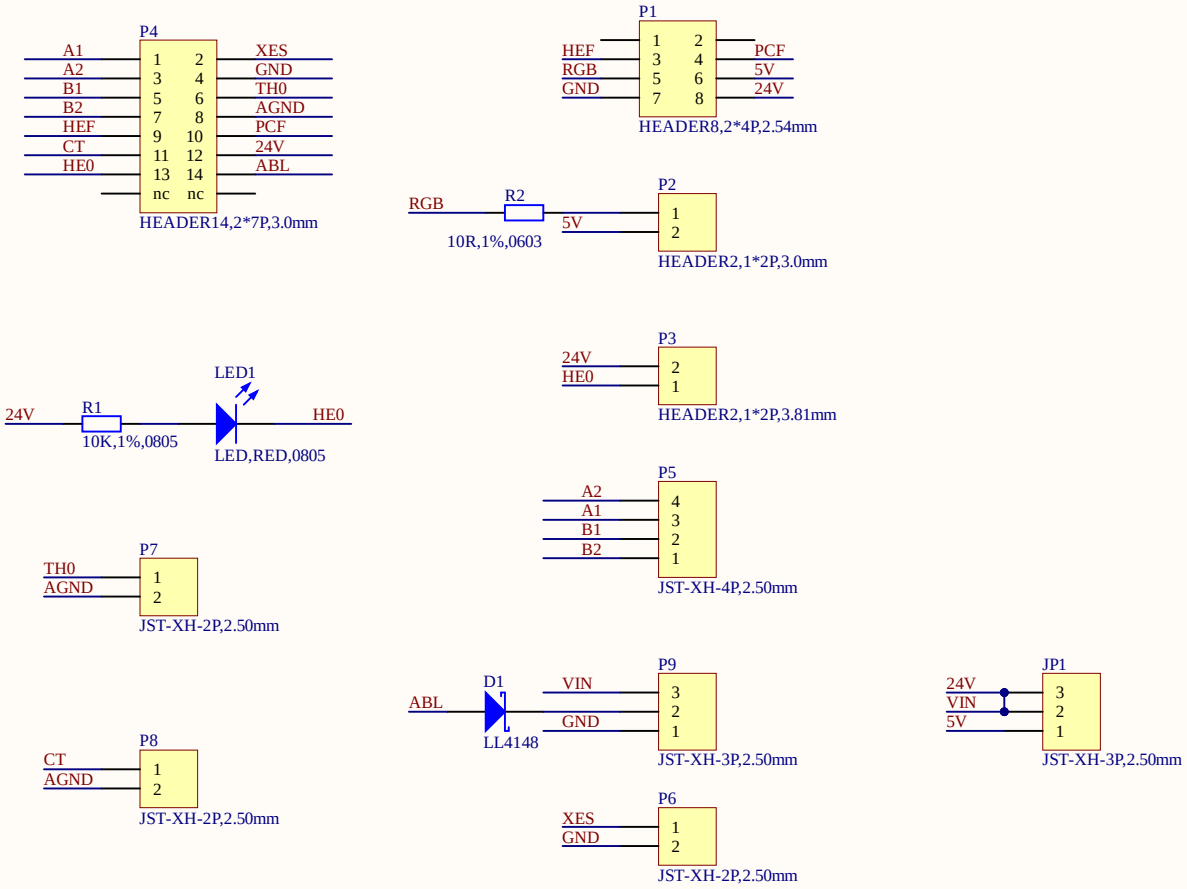
P4
A1
A2
B1
B2
HEF
CT
HE0
1 2
3 4
5 6
7 8
9 10
11 12
13 14
nc nc
XES
GND
TH0
AGND
PCF
24V
ABL
HEADER14,2*7P,3.0mm
P1
HEF
RGB
GND
1 2
3 4
5 6
7 8
PCF
5V
24V
HEADER8,2*4P,2.54mm
RGB
R2
10R,1%,0603
5V
P2
1
2
HEADER2,1*2P,3.0mm
P3
24V
HE0
2
1
HEADER2,1*2P,3.81mm
LED1
24V
R1
10K,1%,0805
HE0
LED,RED,0805
P5
A2
A1
B1
B2
4
3
2
1
JST-XH-4P,2.50mm
P7
TH0
AGND
1
2
JST-XH-2P,2.50mm
P9
ABL
D1
LL4148
VIN
GND
3
2
1
JST-XH-3P,2.50mm
JP1
24V
VIN
5V
3
2
1
JST-XH-3P,2.50mm
P8
CT
AGND
1
2
JST-XH-2P,2.50mm
P6
XES
GND
1
2
JST-XH-2P,2.50mm