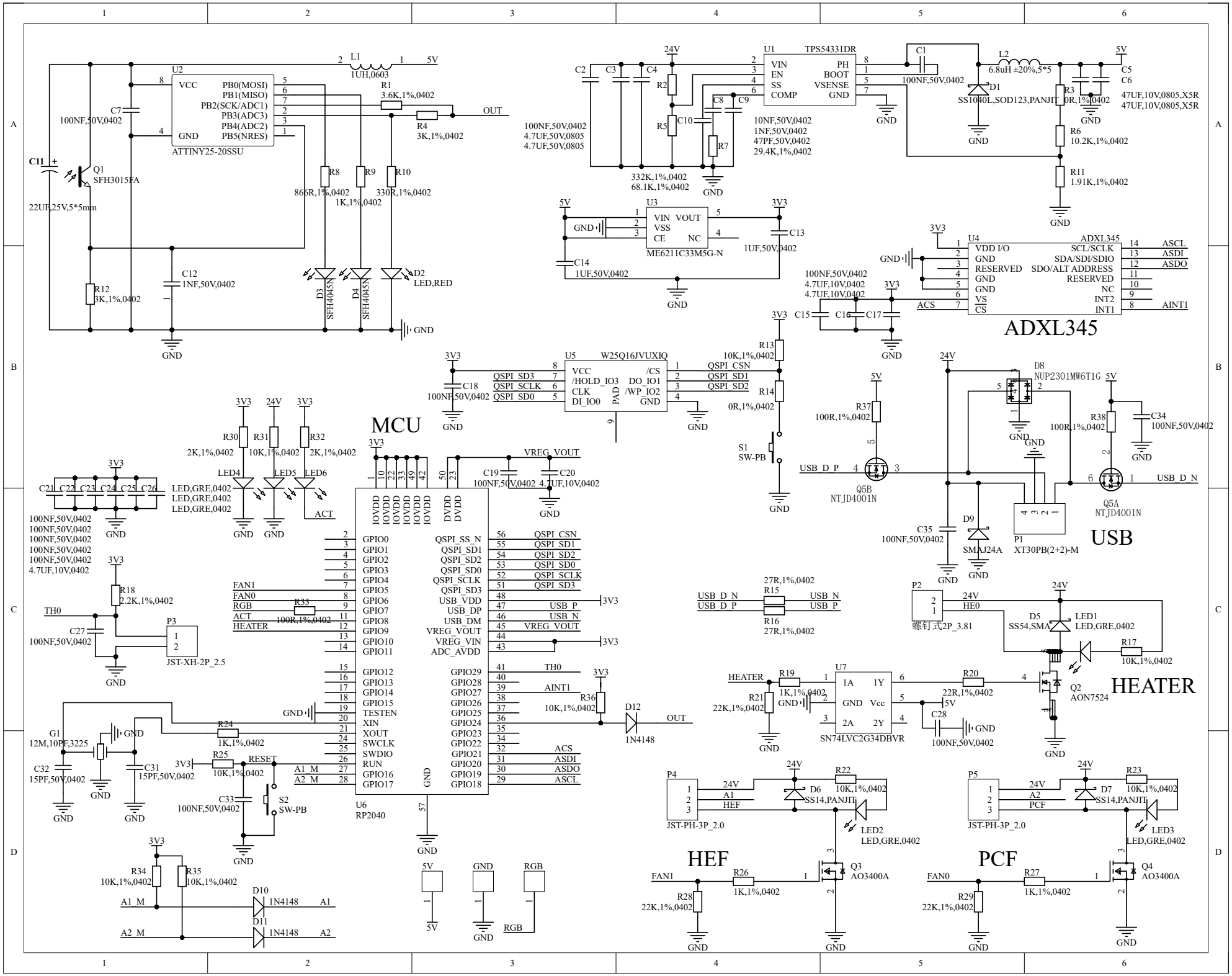
U2
VCC
PB0(MOSI)
PB1(MISO)
PB2(SCK/ADC1)
PB3(ADC3)
PB4(ADC2)
PB5(NRES)
GND
ATTINY25-20SSU
L1
1UH,0603
5V
R1
3.6K,1%,0402
R4
3K,1%,0402
OUT
C7
100NF,50V,0402
C11
22UF,25V,5*5mm
Q1
SFH3015FA
R8
866R,1%,0402
R9
1K,1%,0402
R10
330R,1%,0402
D3
SFH4045N
D4
SFH4045N
D2
LED,RED
R12
3K,1%,0402
C12
1NF,50V,0402
GND
U1
TPS54331DR
VIN
EN
SS
COMP
PH
BOOT
VSENSE
GND
24V
C2
C3
C4
R2
R5
C10
C8
C9
R7
100NF,50V,0402
4.7UF,50V,0805
4.7UF,50V,0805
332K,1%,0402
68.1K,1%,0402
10NF,50V,0402
1NF,50V,0402
47PF,50V,0402
29.4K,1%,0402
C1
100NF,50V,0402
L2
6.8uH ±20%,5*5
D1
SS1040L,SOD123,PANJIT
R3
10R,1%,0402
C5
C6
47UF,10V,0805,X5R
47UF,10V,0805,X5R
R6
10.2K,1%,0402
R11
1.91K,1%,0402
U3
VIN
VOUT
VSS
CE
NC
ME6211C33M5G-N
3V3
C13
1UF,50V,0402
C14
1UF,50V,0402
U4
ADXL345
VDD I/O
GND
RESERVED
GND
GND
VS
CS
SCL/SCLK
SDA/SDI/SDIO
SDO/ALT ADDRESS
RESERVED
NC
INT2
INT1
ASCL
ASDI
ASDO
AINT1
ACS
100NF,50V,0402
4.7UF,10V,0402
4.7UF,10V,0402
C15
C16
C17
ADXL345
U5
W25Q16JVUXIQ
VCC
/HOLD_IO3
CLK
DI_IO0
/CS
DO_IO1
/WP_IO2
GND
PAD
QSPI_SD3
QSPI_SCLK
QSPI_SD0
QSPI_CSN
QSPI_SD1
QSPI_SD2
C18
100NF,50V,0402
R13
10K,1%,0402
R14
0R,1%,0402
S1
SW-PB
MCU
R30
2K,1%,0402
R31
10K,1%,0402
R32
2K,1%,0402
LED4
LED5
LED6
LED,GRE,0402
LED,GRE,0402
LED,GRE,0402
ACT
C21
C22
C23
C24
C25
C26
100NF,50V,0402
100NF,50V,0402
100NF,50V,0402
100NF,50V,0402
100NF,50V,0402
4.7UF,10V,0402
VREG_VOUT
C19
100NF,50V,0402
C20
4.7UF,10V,0402
IOVDD
DVDD
GPIO0
GPIO1
GPIO2
GPIO3
GPIO4
GPIO5
GPIO6
GPIO7
GPIO8
GPIO9
GPIO10
GPIO11
GPIO12
GPIO13
GPIO14
GPIO15
TESTEN
XIN
XOUT
SWCLK
SWDIO
RUN
GPIO16
GPIO17
QSPI_SS_N
QSPI_SD1
QSPI_SD2
QSPI_SD0
QSPI_SCLK
QSPI_SD3
USB_VDD
USB_DP
USB_DM
VREG_VOUT
VREG_VIN
ADC_AVDD
GPIO29
GPIO28
GPIO27
GPIO26
GPIO25
GPIO24
GPIO23
GPIO22
GPIO21
GPIO20
GPIO19
GPIO18
QSPI_CSN
QSPI_SD1
QSPI_SD2
QSPI_SD0
QSPI_SCLK
QSPI_SD3
USB_P
USB_N
VREG_VOUT
TH0
AINT1
ACS
ASDI
ASDO
ASCL
FAN1
FAN0
RGB
ACT
HEATER
R33
100R,1%,0402
R18
2.2K,1%,0402
TH0
C27
100NF,50V,0402
P3
JST-XH-2P_2.5
G1
12M,10PF,3225
C32
15PF,50V,0402
C31
15PF,50V,0402
R24
1K,1%,0402
R25
10K,1%,0402
RESET
C33
100NF,50V,0402
S2
SW-PB
A1_M
A2_M
R36
10K,1%,0402
D12
1N4148
OUT
U6
RP2040
R34
10K,1%,0402
R35
10K,1%,0402
D10
1N4148
A1
D11
1N4148
A2
5V
GND
RGB
USB
D8
NUP2301MW6T1G
R37
100R,1%,0402
Q5B
NTJD4001N
USB_D_P
R38
100R,1%,0402
C34
100NF,50V,0402
Q5A
NTJD4001N
USB_D_N
C35
100NF,50V,0402
D9
SMAJ24A
P1
XT30PB(2+2)-M
27R,1%,0402
R15
R16
27R,1%,0402
USB_D_N
USB_D_P
USB_N
USB_P
HEATER
P2
螺钉式2P_3.81
HE0
D5
SS54,SMA
LED1
LED,GRE,0402
R17
10K,1%,0402
Q2
AON7524
R19
1K,1%,0402
R21
22K,1%,0402
U7
1A
1Y
GND
Vcc
2A
2Y
SN74LVC2G34DBVR
R20
22R,1%,0402
C28
100NF,50V,0402
P4
JST-PH-3P_2.0
A1
HEF
D6
SS14,PANJIT
R22
10K,1%,0402
LED2
LED,GRE,0402
HEF
FAN1
R26
1K,1%,0402
R28
22K,1%,0402
Q3
AO3400A
P5
JST-PH-3P_2.0
A2
PCF
D7
SS14,PANJIT
R23
10K,1%,0402
LED3
LED,GRE,0402
PCF
FAN0
R27
1K,1%,0402
R29
22K,1%,0402
Q4
AO3400A