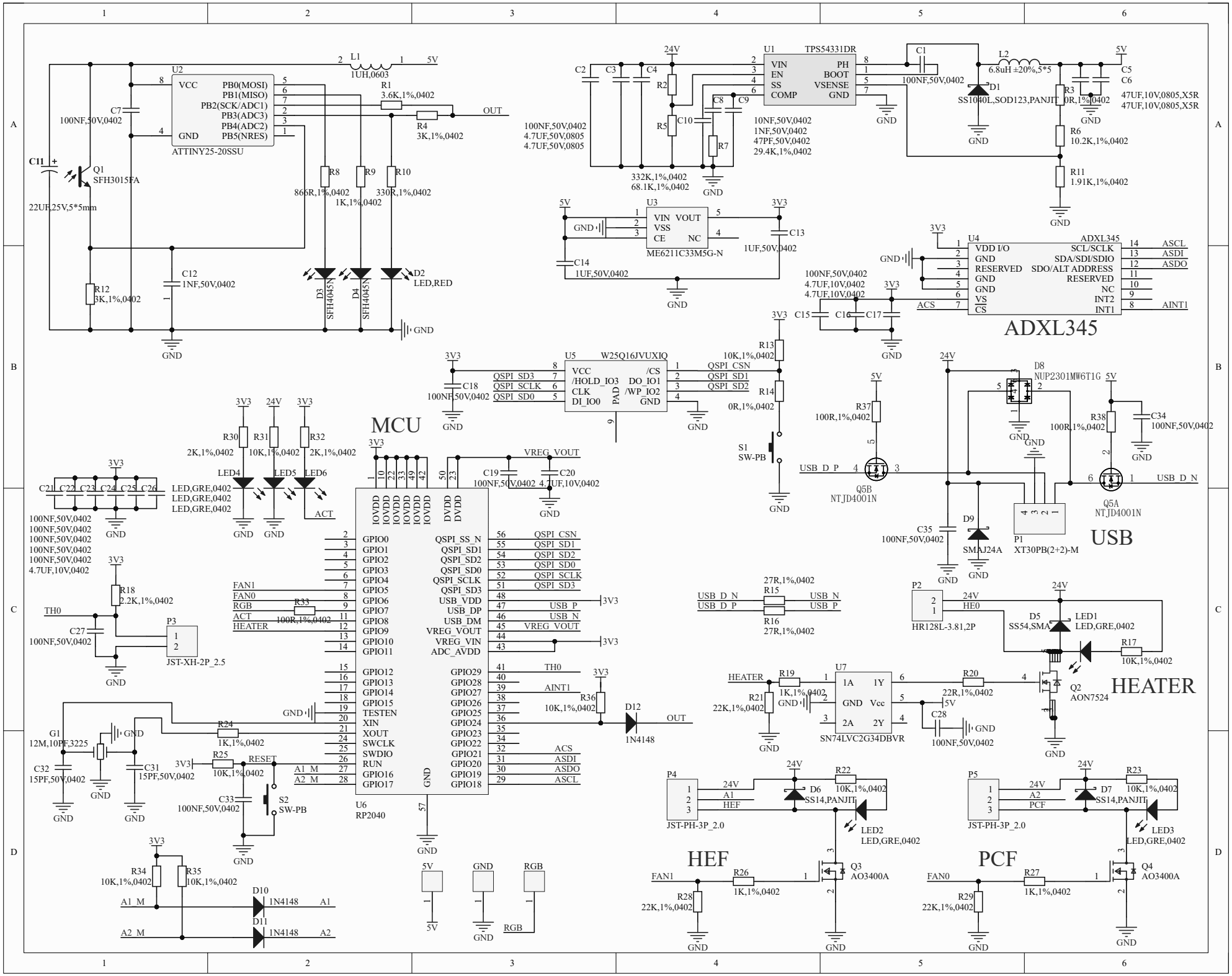
U2
VCC
PB0(MOSI)
PB1(MISO)
PB2(SCK/ADC1)
PB3(ADC3)
PB4(ADC2)
PB5(NRES)
GND
ATTINY25-20SSU
L1
1UH,0603
5V
R1
3.6K,1%,0402
R4
3K,1%,0402
OUT
C7
100NF,50V,0402
C11
22UF,25V,5*5mm
Q1
SFH3015FA
R8
866R,1%,0402
R9
1K,1%,0402
R10
330R,1%,0402
D3
SFH4045N
D4
SFH4045N
D2
LED,RED
R12
3K,1%,0402
C12
1NF,50V,0402
GND
U1
TPS54331DR
VIN
EN
SS
COMP
PH
BOOT
VSENSE
GND
24V
C2
C3
C4
R2
R5
C10
C8
C9
R7
100NF,50V,0402
4.7UF,50V,0805
4.7UF,50V,0805
332K,1%,0402
68.1K,1%,0402
10NF,50V,0402
1NF,50V,0402
47PF,50V,0402
29.4K,1%,0402
C1
100NF,50V,0402
L2
6.8uH ±20%,5*5
D1
SS1040L,SOD123,PANJIT
R3
10R,1%,0402
C5
C6
47UF,10V,0805,X5R
47UF,10V,0805,X5R
R6
10.2K,1%,0402
R11
1.91K,1%,0402
U3
VIN
VOUT
VSS
CE
NC
ME6211C33M5G-N
3V3
C13
1UF,50V,0402
C14
1UF,50V,0402
U4
ADXL345
VDD I/O
GND
RESERVED
GND
GND
VS
CS
SCL/SCLK
SDA/SDI/SDIO
SDO/ALT ADDRESS
RESERVED
NC
INT2
INT1
ASCL
ASDI
ASDO
AINT1
ACS
100NF,50V,0402
4.7UF,10V,0402
4.7UF,10V,0402
C15
C16
C17
ADXL345
U5
W25Q16JVUXIQ
VCC
/HOLD_IO3
CLK
DI_IO0
/CS
DO_IO1
/WP_IO2
GND
PAD
QSPI_SD3
QSPI_SCLK
QSPI_SD0
QSPI_CSN
QSPI_SD1
QSPI_SD2
C18
100NF,50V,0402
R13
10K,1%,0402
R14
0R,1%,0402
S1
SW-PB
MCU
R30
2K,1%,0402
R31
10K,1%,0402
R32
2K,1%,0402
LED4
LED5
LED6
LED,GRE,0402
LED,GRE,0402
LED,GRE,0402
ACT
C21
C22
C23
C24
C25
C26
100NF,50V,0402
100NF,50V,0402
100NF,50V,0402
100NF,50V,0402
100NF,50V,0402
4.7UF,10V,0402
C19
100NF,50V,0402
C20
4.7UF,10V,0402
VREG_VOUT
IOVDD
DVDD
GPIO0
GPIO1
GPIO2
GPIO3
GPIO4
GPIO5
GPIO6
GPIO7
GPIO8
GPIO9
GPIO10
GPIO11
GPIO12
GPIO13
GPIO14
GPIO15
TESTEN
XIN
XOUT
SWCLK
SWDIO
RUN
GPIO16
GPIO17
QSPI_SS_N
QSPI_SD1
QSPI_SD2
QSPI_SD0
QSPI_SCLK
QSPI_SD3
USB_VDD
USB_DP
USB_DM
VREG_VOUT
VREG_VIN
ADC_AVDD
GPIO29
GPIO28
GPIO27
GPIO26
GPIO25
GPIO24
GPIO23
GPIO22
GPIO21
GPIO20
GPIO19
GPIO18
FAN1
FAN0
RGB
ACT
HEATER
R33
100R,1%,0402
TH0
R18
2.2K,1%,0402
C27
100NF,50V,0402
P3
JST-XH-2P_2.5
G1
12M,10PF,3225
C32
15PF,50V,0402
C31
15PF,50V,0402
R24
1K,1%,0402
R25
10K,1%,0402
RESET
C33
100NF,50V,0402
S2
SW-PB
U6
RP2040
R36
10K,1%,0402
D12
1N4148
OUT
R34
10K,1%,0402
R35
10K,1%,0402
A1_M
A2_M
D10
1N4148
D11
1N4148
A1
A2
5V
GND
RGB
USB
R37
100R,1%,0402
Q5B
NTJD4001N
USB_D_P
USB_D_N
D8
NUP2301MW6T1G
R38
100R,1%,0402
C34
100NF,50V,0402
Q5A
NTJD4001N
C35
100NF,50V,0402
D9
SMAJ24A
P1
XT30PB(2+2)-M
R15
27R,1%,0402
R16
27R,1%,0402
USB_D_N
USB_D_P
P2
HR128L-3.81,2P
HE0
D5
SS54,SMA
LED1
LED,GRE,0402
R17
10K,1%,0402
HEATER
R19
1K,1%,0402
R21
22K,1%,0402
U7
1A
1Y
GND
Vcc
2A
2Y
SN74LVC2G34DBVR
R20
22R,1%,0402
C28
100NF,50V,0402
Q2
AON7524
P4
JST-PH-3P_2.0
A1
HEF
D6
SS14,PANJIT
R22
10K,1%,0402
LED2
LED,GRE,0402
HEF
FAN1
R26
1K,1%,0402
R28
22K,1%,0402
Q3
AO3400A
P5
JST-PH-3P_2.0
A2
PCF
D7
SS14,PANJIT
R23
10K,1%,0402
LED3
LED,GRE,0402
PCF
FAN0
R27
1K,1%,0402
R29
22K,1%,0402
Q4
AO3400A