QUANTITY: (1)

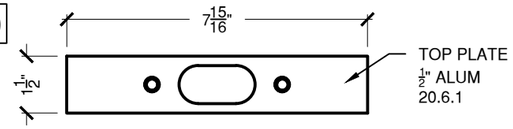

1 PLAN
Scale: 1 1/2"=1'-0"

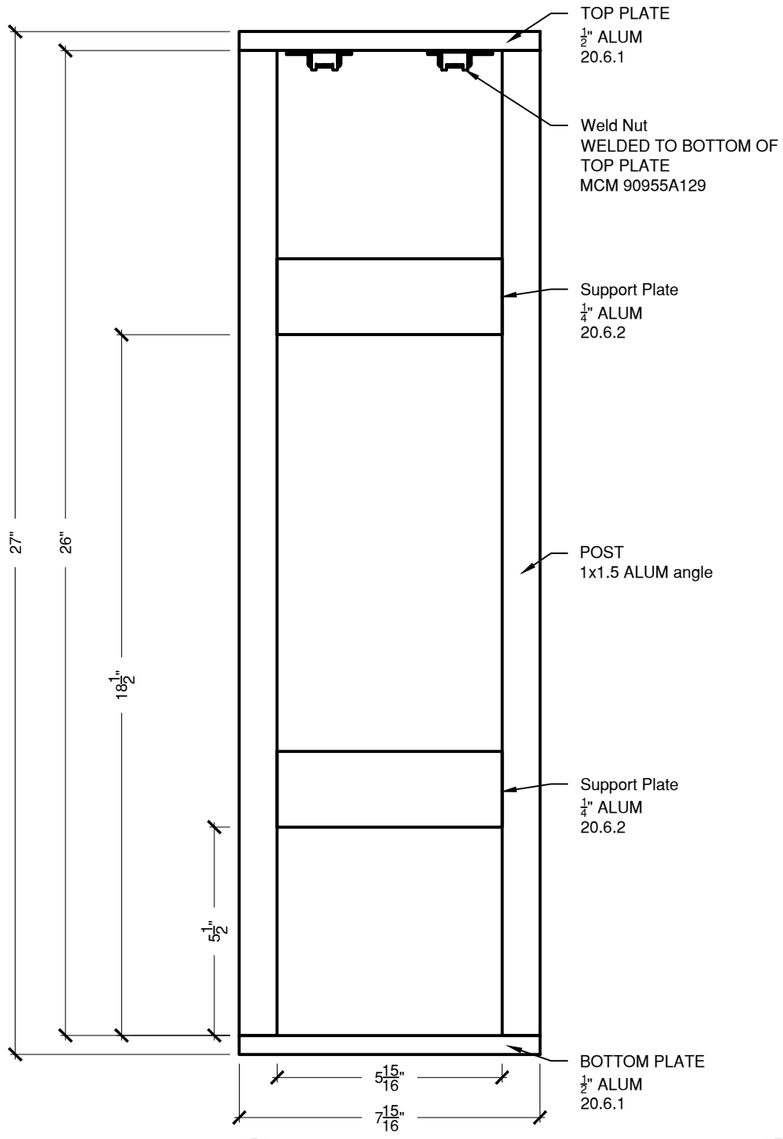

2 SIDE
Scale: 1 1/2"=1'-0"

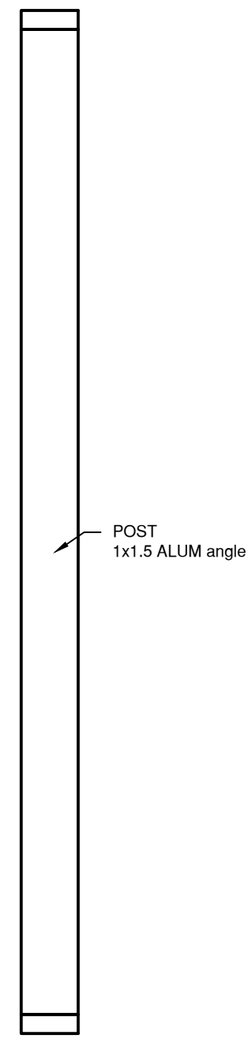

3 FRONT
Scale: 1 1/2"=1'-0"

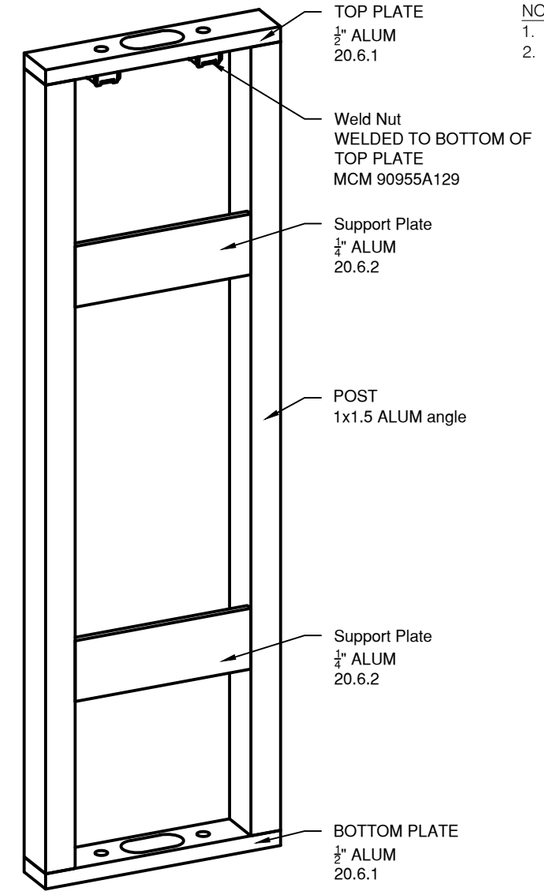

4 OVERVIEW
Scale: 1 1/2"=1'-0"

NOTES:
1. WELD ALL JOINTS.
2. ALL OUTSIDE EDGES MUST BE FLUSH.

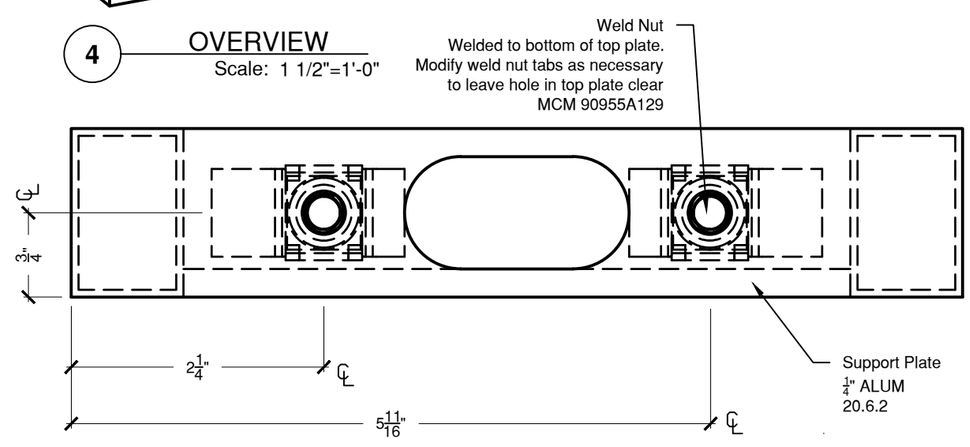

5 TOP VIEW DETAIL (HIDDEN LINE)
Scale: 1 1/2"=1'-0"

solomongroup
THE ART OF BRINGING STORIES TO LIFE.

Released:

NO:	Date:	Revisions:	Drawn By	Review BY	PM
0	06/22/2017	Initial Submission	SCHR	MT	WH
1					XX
2					XX
3					XX
4					XX

\\192.168.72.30\Drafting\Drafting\2017\SG6020 Mt. Vernon\01 DRAFTING\02 SHOP\SG\ENG TYPICALS\01 Typical Kiosk\Kiosk Assembly\Station Kiosk - Leg Frame.dwg

Client Approval

Signature: _____ Date: _____

☐ Approved
☐ Approved As Noted
☐ Revise And Resubmit

Review & Return
For Information Only

PROJECT MANAGER: Whitney Hines

CONTACT INFORMATION: whitney.hines@solomongroup.com

STANDARD TOLERANCES

MACHINING	WELDING ASSEMBLY
X ±.100"	DIMENSION 0"-12" ±1/32"
XX ±.005"	DIMENSION 12"-24" ±1/16"
XXX ±.002"	DIMENSION 24"-36" ±1/8"
ANG. ±1/2°	ANG. ±1/2°

PROJECT NAME: Be Washington

PROJECT ADDRESS: 3200 MOUNT VERNON HWY, MT VERNON, VA 22121

SHEET TITLE: Station Kiosk - Leg Frame

SG JOB #: 6020

Z.03.410

DISCLAIMER: SOLOMON GROUP MAKES NO REPRESENTATION OR WARRANTIES, EXPRESS OR IMPLIED, WITH RESPECT TO THE USE OF THE DRAWING PROVIDED HEREIN, REGARDLESS OF ITS FORMAT OR THE MEANS OF ITS TRANSMISSION. THERE IS NO GUARANTEE OR REPRESENTATION TO THE USER AS TO THE ACCURACY, CURRENCY, SUITABILITY, OR RELIABILITY OF THIS DRAWING FOR ANY PURPOSE. THIS DRAWING AND INFORMATION CONTAINED HEREIN IS FOR GENERAL PRESENTATION PURPOSES ONLY. THE DRAWING IS NOT INTENDED FOR USE ON ENGINEERING DESIGN PLANS. THIS DRAWING AND THE INFORMATION CONTAINED THEREIN IS THE CONFIDENTIAL, PROPRIETARY INFORMATION OF SOLOMON GROUP AND MAY NOT BE USED OR REPRODUCED WITHOUT APPROVAL OF SOLOMON GROUP. COPYRIGHT SOLOMON GROUP 2017. ALL RIGHTS RESERVED.