Latest updates: https://dl.acm.org/doi/10.1145/3700838.3703681

PDF Download
3700838.3703681.pdf
23 March 2026
Total Citations: 4
Total Downloads: 1697

Published: 04 January 2025

Citation in BibTeX format

ICDCN 2025: 26th International Conference on Distributed Computing and Networking
January 4 - 7, 2025
Hyderabad, India

RESEARCH-ARTICLE

Comprehensive Analysis of Air Quality Trends in India Using Machine Learning and Deep Learning Models

ISHA GANGULI, JAIN (Deemed-to-be University), Bengaluru, KA, India

MEET NAKUM, JAIN (Deemed-to-be University), Bengaluru, KA, India

BHASHWATEE DAS, JAIN (Deemed-to-be University), Bengaluru, KA, India

NANCY KSHETRIMAYUM, JAIN (Deemed-to-be University), Bengaluru, KA, India

Open Access Support provided by:

JAIN (Deemed-to-be University)

ICDCN '25: Proceedings of the 26th International Conference on Distributed Computing and Networking (January 2025)
https://doi.org/10.1145/3700838.3703681
ISBN: 9798400710629

Comprehensive Analysis of Air Quality Trends in India Using Machine Learning and Deep Learning Models

Isha Ganguli*
Jain University
Bangalore, India
ishaganguli1991@gmail.com

Meet Nakum
Jain University
Bangalore, India
21btrcs034@jainuniversity.ac.in

Bhashwatee Das
Jain University
Bangalore, India
21btrcs124@jainuniversity.ac.in

Nancy Kshetrimayum
Jain University
Bangalore, India
21btrcs188@jainuniversity.ac.in

Abstract

Globally air pollution has affected millions of us. In a populated country like India, accurate forecasting of air quality PM2.5 levels is crucial for indicate health risks. This study shows the different capabilities of Deep Learning models and Machine Learning Model in terms of examine the air quality variations in various states across India. In this work, different state-of-the-art deep learning models like Recurrent Neural Network (RNN), Long Short-Term Memory (LSTM) and Gated Recurrent Unit (GRU) networks and traditional ML models like ARIMA and SARIMA have been applied for air quality prediction for Indian states. Our comprehensive study and comparative analysis shows that RNN performs better in forecasting PM2.5 levels than other models used. RNN model achieved average accuracy of nearly 99% while processing sequential data for air quality predictions. Our work demonstrates that the RNN model could potentially effectively utilized for air quality prediction. This study's novel contribution lies in its comprehensive comparison of both traditional statistical models and advanced deep learning techniques for air quality prediction across multiple Indian states, providing insights into model performance variability across diverse geographical regions.

CCS Concepts

• **Social and environmental topics** → **Computing / technology policy**; • **Environmental study** → *Time series analysis.*

Keywords

Air pollution, RNN, LSTM, GRU, ARIMA, SARIMA

ACM Reference Format:
Isha Ganguli, Meet Nakum, Bhashwatee Das, and Nancy Kshetrimayum. 2025. Comprehensive Analysis of Air Quality Trends in India Using Machine Learning and Deep Learning Models. In *26th International Conference on Distributed Computing and Networking (ICDCN 2025), January 04–07, 2025, Hyderabad, India.* ACM, New York, NY, USA, 6 pages. https://doi.org/10.1145/3700838.3703681

*Corresponding author

Permission to make digital or hard copies of all or part of this work for personal or classroom use is granted without fee provided that copies are not made or distributed for profit or commercial advantage and that copies bear this notice and the full citation on the first page. Copyrights for third-party components of this work must be honored. For all other uses, contact the owner/author(s).
ICDCN 2025, January 04–07, 2025, Hyderabad, India
© 2025 Copyright held by the owner/author(s).
ACM ISBN 979-8-4007-1062-9/25/01
https://doi.org/10.1145/3700838.3703681

1 Introduction

Air pollution poses one of biggest and most significant environmental challenges today, drastically influencing human health and the environment. In densely populated nations like India, it has led to serious respiratory conditions, cardiovascular issues, and premature deaths. This is why projecting air quality, particularly targeting pollutants such as PM2.5, is crucial for mitigating these negative health impacts and informing policy decisions aimed at improving air quality. Figure 1 depicts the different states of India having different PM2.5 concentration.

Machine Learning models, such as ARIMA [4] and SARIMA [4, 8], predict future trends by using historical information. Apart from the other future prediction tasks, these models are used to predict air pollution levels [4]. The ARMA model captures the relationships between current and past air pollution levels, allowing for the prediction of future pollution concentrations. The ARIMA model is particularly useful in handling unpredictable air quality data, incorporating differencing to stabilize the series and improve forecast accuracy. The SARIMA model is essential for addressing seasonal variations in air pollution, such as higher pollution levels during certain times of the year. By leveraging these models, we aim to provide accurate and reliable forecasts of air quality, enabling better planning and mitigation strategies to combat air pollution in various Indian cities.

Apart from the statistical ML models, deep Learning models like RNN [20, 24], LSTM [7], and GRU [6] are also used for future prediction. The utilisation of the Recurrent Neural Network (RNN) model was based on its capacity to effectively capture temporal dependencies in sequential data, rendering it highly suitable for time series prediction.Nevertheless, RNNs may suffer with long-term dependence, which is where the LSTM model comes into play. LSTM networks are specifically designed for conquering the constraints of RNNs by using memory cells to maintain information over long periods, thus improving the prediction of complex time series patterns. The GRU model, a variation of LSTM, offers a more streamlined architecture with similar capabilities, making it computationally efficient while still effectively capturing long-term dependencies in the data.

This study delves into the analysis of air quality trends in India

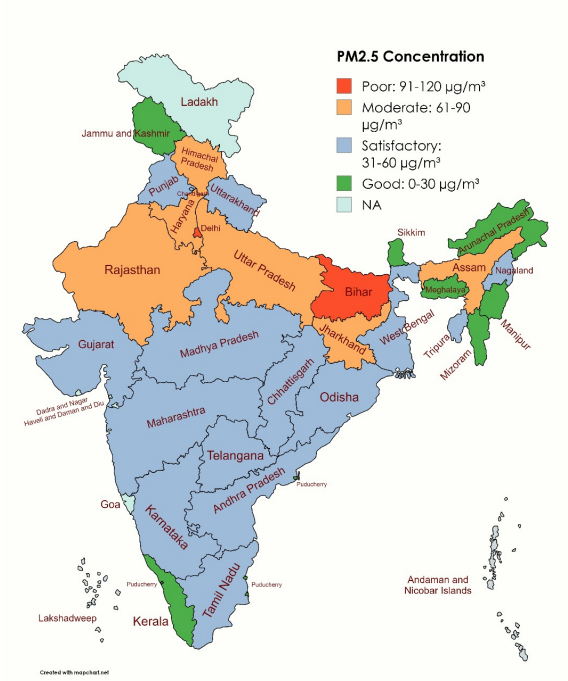

Figure 1: States of India based on PM2.5 concentration

by employing Machine Learning (ML) models and Deep Learning (DL) techniques. So the main aim and objective of this work is to provide a detailed comparative study of these aforementioned machine learning and deep learning models for air quality prediction which can further help the researchers and environmentalists in Indian context. This study makes a significant contribution by thoroughly comparing traditional statistical models with advanced deep learning techniques for air quality prediction across various Indian states, offering insights into how model performance varies across different geographical regions. The main contributions of this paper are:

- A intensive investigation of the performance of multiple statistical methods such as ARMA, ARIMA, and SARIMA, as well as deep learning methods such as RNN, LSTM, and GRU, in predicting air quality in several Indian cities.
- The performance has been analysed based on accuracy metrics such as Mean Absolute Percentage Error (MAPE) and Root Mean Squared Error (RMSE).
- Dataset has been collected from kaggle [13] which is provided by Central Control Room for Air Quality Management having air quality parameters along with their meteorological factors from various monitoring stations in India from 2010 to 2023.
- In terms of air quality prediction, the RNN model appears to exceed the others.

2 Related Work

2.1 Air Quality Prediction Models

As the air pollution has become a huge concerning area for today's society, researchers are working in many ways [21, 22] to predict the several features and effects of it. Kanaujia et. al. in their paper [9] talks about air pollution in India, it's major causes, air pollutants, and the initiatives taken by the Indian Government. The research says metropolitan India's air pollution problems stem from the difficulty of monitoring and regulating pollution from various sources. The paper [15] discusses a collaborative study on addressing air pollution where they suggest authorities, bodies, and doctors work together to solve the problem. The article [12] provides a thorough examination of the current directions in air pollution research, with a particular emphasis on two primary areas: medical-biological analysis and physical engineering. The paper [14] studies the applicability of machine learning algorithms namely Random Forest, Linear Regression, and Gaussian Naïve Bayes, to predict the Air Quality Index (AQI). The paper [18] by Rahman et al. presents a machine learning-based system named "AirNet," which is designed to forecast air quality levels and deliver real-time alerts. The paper [3] investigates a deep learning model designed to predict the Air Quality Index (AQI) by employing a Generative Adversarial Network (GAN) for data preprocessing and filling in missing values, followed by a modified Stacked Attention GRU that incorporates Kullback-Leibler (KL) divergence for regression tasks.

2.2 Machine Learning in Environmental Studies

Machine learning models are nowadays hugely used in several environmental studies. The paper[23] assess the influence of weather conditions on the amount of PM2.5 and forecast the levels for the following 30 days and 72 hours on a daily and hourly basis in Pakistan using FbProphet, LSTM, and LSTM encoder decoder. The paper [16] assessed COVID-19 prediction accuracy using data from Recife, Pernambuco, on confirmed cases. This study aimed to predict FMCG, PHARMA, and BANKING sector pricing and market conditions. Paper [11] focus on the transformative applications of AI and machine learning in environmental science, with specific emphasis on public health implications of climate variability and advanced metabolomics. Their research reviews methodologies that address data complexity in metabolite screening and pollutant identification, while noting challenges related to data fidelity and interdisciplinary integration. [17] This research focusses on the confluence of machine learning and neural networks to address critical environmental concerns such as climate change, pollution, and biodiversity loss. Moreover, the study illustrates the transformative impact of these technologies in analyzing complex data, fostering sustainable practices, and enabling informed decision-making. [19] This paper focus on AQI prediction in Visakhapatnam, India, utilizing open-source data from the Central Pollution Control Board (CPCB) over five years.

2.3 Deep Learning for Time Series Forecasting

[2] forecasts the greatest price using two models (LSTM and ARIMA) utilizing Mulkia Gulf Real Estate data from Saudi Exchange. ARIMA forecasted stock prices more accurately than LSTM, hence ARIMA models are better for stock price prediction. In their work [10], the authors used the ARIMA model to forecast the production of sugarcane in India over a five-year period. The objectives of the work [5] are to analyse recent breakthroughs and unresolved issues in deep learning architectures for time series forecasting, while

also paying attention to benchmark data sets. Paper [1] provides a all-inclusive overview of contemporary deep learning models used for time series forecasting, specifically focusing on three prominent models: Artificial Neural Networks (ANN), Long Short-Term Memory (LSTM), and Temporal-Convolutional Neural Networks (TCNN).

In this work, performance of several Statistical Machine learning models (ARIMA, SARIMA) and Deep learning models (RNN, LSTM, GRU) has been compared to find the most suitable model for air quality prediction for the different states in India.

3 Methodology

3.1 ARIMA Model

AutoRegressive Integrated Moving Average (ARIMA) is a robust technique employed for projecting potential values in time series data. The ARIMA model is a composite of two models. The ARIMA model consists of the Autoregressive (AR) and the Moving Average (MA) models are adopted to accomplish stationarity in the dataset by using integration (I) at least once. The autoregressive (AR) element of the model predicts future values by using the lagged values from the data, as defined by equation 1.

$$AR_{(p)} : x_t = \alpha + \sum_{i=1}^{p} \beta_i x_{t-i} + \varepsilon \tag{1}$$

where $\beta_1, \beta_2, ...\beta_p$ are parameters and the random variable ε is white noise, which is typically independent and identically distributed normal random variables. The Moving Average approach uses forecasting error differences to predict value. The Moving Average (MA) equation is provided in equation 2.

$$x_t = \mu + \sum_{i=1}^{q} \phi_i \varepsilon_{t-i} \tag{2}$$

where $\phi_1, \phi_2 ... \phi_q$ are the model's parameters, and μ is the expectation of x_t (typically assumed to be zero). The ARIMA model is defined by three parameters (p,d, and q). 'p' represents the The amount of lag observations incorporated in the model. 'd' represents the amount with which raw observations are differenced. The moving average window size is denoted by 'q'. Prediction is done by combining all three orders and estimating how quickly the model can be fitted. Figure 2 displays the workflow diagram for the ARIMA model.

3.2 SARIMA model

Seasonal Autoregressive Integrated Moving Average (SARIMA) is intended to manage data that exhibits seasonal patterns. It is a reliable instrument for forecasting because it extracts short- and long-term correlations from the data. It integrates seasonal components with the principles of autoregressive (AR), integrated (I), and moving average (MA) models. Seasonal patterns in data are fluctuations that are consistent and predictable over a specific time frame, such as days, months, or years. These patterns are the result of seasonal effects, which may be associated with weather, holidays, and other factors. The generic equation of SARIMA model is give in the equation 3.

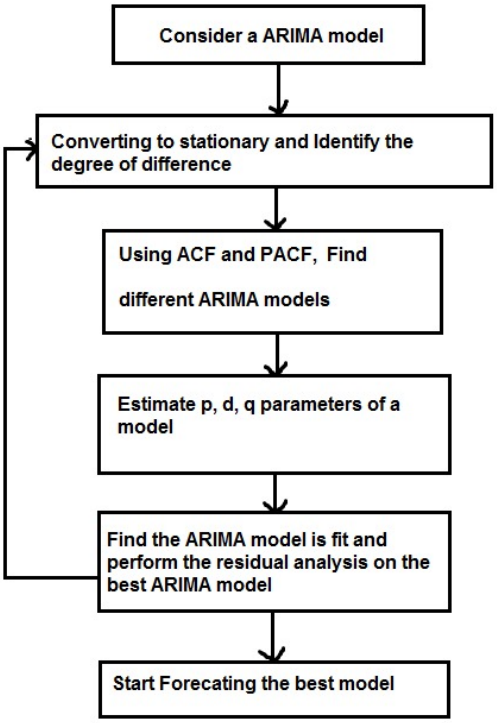

Figure 2: Workflow diagram of ARIMA model

$$(1-\emptyset_1 B)(1-\Phi_1 B^s)(1-B)(1-B^s)y_t = (1+\theta_1 B)(1+\Theta_1 B^s)\varepsilon_t \tag{3}$$

where the time series y_t, backward shift operator B, non-seasonal autoregressive coefficient ϕ_1, seasonal autoregressive coefficient Φ_1, non-seasonal moving average coefficient Θ_1, seasonal moving average coefficient ε, seasonal period s, and the white noise error term at time t are all considered.

3.3 RNN model

RNNs are a specialised kind of neural network framework deliberated primarily for efficiently treating sequential input. Unlike conventional ML models, recurrent neural networks (RNNs) possess connections that create directed cycles, enabling the flow of information to endure. It has hidden state that collects information from past stages in the sequence, it makes them learn the dependencies over time. RNNs has several applications like speech recognition, time series prediction, NLP etc. Figure 3 depicts the RNN model.

3.4 LSTM model

Long Short-Term Memory (LSTMs) are able to learn long-term dependencies. LSTM networks perform better at solving the vanishing gradient problem. LSTMs have a special structure that helps them manage long-term dependencies:

• Forget Gate: It decides the portion of information to forget.
• Input Gate: Modifies the cell state using information.

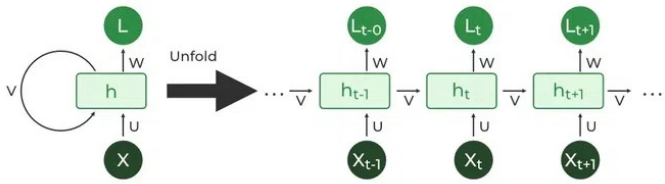

Figure 3: Structural diagram of RNN

• Output Gate:It determines the output by considering the cell condition.
Figure 4 depicts the LSTM architecture.

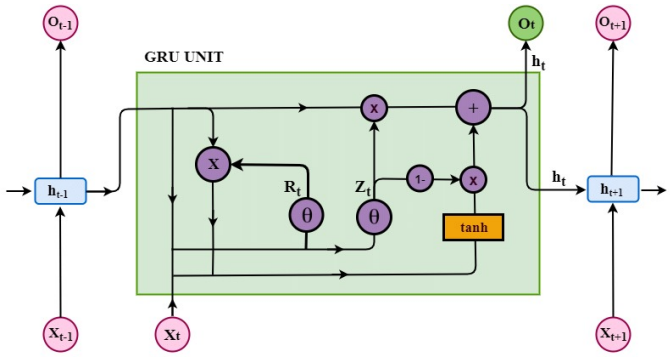

Figure 4: Structural diagram of LSTM

3.5 GRU model

Gated Recurrent Unit, super smart tool that can learn from sequences of information. It has a special trick called a "gating mechanism" that helps it sort through information. This helps GRU to focus on important stuff from the past, even if it happened a long time ago. Structure of GRU –
• The Reset Gate is like a ruthless cleaner. It decides what old information in the cabinet can be trashed. This gate forgets things that are probably not important anymore, making space for new stuff.
• The Update Gate is a careful archivist. It sifts through the information the Reset Gate wants to keep and the new information coming in. This gate decides what is valuable for the future and keeps it nicely organized in the cabinet.

3.6 RNN-based Air Quality Prediction

In this work, RNN based Air Quality prediction framework has been proposed. Algorithm 1 describes the steps of the model.

Algorithm 1 RNN-based Air Quality Prediction

Input: Historical air quality data $X = \{x_1, x_2, ...x_t\}$
Output Predicted air quality $y\{t+1\}$
1: Initialize RNN parameters θ
2: for epoch = 1 to max_epochs do
3: for each batch b in X do
4: $h_t = tanh\,(W_hx * x_t + W_hh * h\{t-1\} + b_h)$
5: $y_t = W_hy * h_t + b_y$ 6: Compute Loss L using y_t and true values
7: end for
8: end for
9: **Return** trained model

4 Results and Discussion

In this paper, a comparative study has been carried out between several statistical machine learning and Deep learning models in the forecasting of air pollution. We compared two main approaches: state-of-the-art statistical models (ARIMA, and SARIMA) and cutting-edge deep learning models (RNN, LSTM, and GRU).

Sl. No.	STATES	FILES
1	UTTAR PRADESH	57
2	MAHARASHTRA	41
3	DELHI	40
4	RAJASTHAN	35
5	BIHAR	35
6	HARYANA	30
7	MADHYA PRADESH	22
8	GUJARAT	17
9	WEST BENGAL	14
10	TELANGANA	14

Table 1: Top 10 State's Files and Corresponding States

4.1 Dataset Description

To make our air pollution predictions as accurate as possible, we needed a massive amount of real-world data. In this regard, we have taken dataset namely "Time Series Air Quality Data of India (2010-2023)" [13] for our task which is having air quality data for all the states in India. Beside the information of basic pollution levels, this dataset got several detailed information like PM2.5 concentrations (tiny particles that can irritate your lungs) and weather data for various cities and states across India.The extensive analysis of air quality patterns spanning over a decade served as the basis for our forecast models.

Due to the lack of the survey reports, the dataset contains dissimilar number of files for the states. For the preprocessing of the dataset, we have considered the top ten states based on the number of air quality files available per state. Total number of files in the data is 452. The state having highest number of files is Uttar Pradesh having 52 files. We have taken top ten files as the other states having very less number of air quality files and can behave as the outlier for the system. The table 1 lists the top 10 states based on the number of files processed for each state, highlighting the breadth of data used in our analysis.

4.2 Data Preprocessing

The following steps are taken for pre-processing of the data:

- Missing value imputation: We used forward fill for short gaps and interpolation for longer gaps.
- Feature scaling: All features have been normalized by min-max scaling method in the range [0, 1].
- Temporal alignment: Data from different stations were aligned to a common time grid with hourly resolution.
- Outlier detection: Interquartile Range (IQR) method has been used To find and delete outliers.

4.3 Experimental Setup

This research relied on the power of Python, a versatile programming language often used for data analysis. Several specialized libraries like Statsmodels and scikit-learn , TensorFlow and Keras has been utilized in our work. Statsmodels and scikit-learn libraries are the toolbelt for building the traditional statistical models (ARIMA, and SARIMA). TensorFlow and Keras are used for the cutting-edge deep learning models (RNN, LSTM, and GRU). All experiments were conducted on a workstation with an Intel Xeon E5-2680 v4 CPU, 128GB RAM, and an NVIDIA Tesla V100 GPU. Hyperparameters for the deep learning models were as follows:

- RNN: hidden units=64, learning rate=0.001, batch size=32
- LSTM: hidden units=128, learning rate=0.001, batch size=32
- GRU: hidden units=96, learning rate=0.001, batch size=32

For ARIMA and SARIMA, we used grid search to find optimal parameters.

4.4 Performance Analysis

Table 2 represents the performance analysis of ARIMA, SARIMA, RNN, LSTM and GRU models in predicting the air quality for the ten Indian states. From the comparative analysis, it is evident that the RNN model surpasses all other models in terms of accuracy across the majority of states. LSTM gives Average Accuracy of 86.19%. LSTM models demonstrate strong predictive capabilities with a high average accuracy. This indicates that LSTMs are well-suited for handling the temporal dependencies in air quality data. 2. GRU (Gated Recurrent Unit) gives Average Accuracy of 69.46%. GRU models also show good performance, although their average accuracy is lower than that of LSTM models. GRUs are a simpler alternative to LSTMs and perform well in many scenarios, but may not capture temporal dependencies as effectively as LSTMs. ARIMA gives Average Accuracy of 53.42%. ARIMA models, while useful for time series forecasting, show moderate accuracy in predicting air quality. Their performance is significantly lower compared to LSTM and GRU models, suggesting that they may not be as effective in capturing complex patterns in the data. SARIMA gives Average Accuracy: 16.77%. SARIMA models have the lowest average accuracy among the models evaluated. This indicates that while SARIMA can account for seasonality in the data, it may not be sufficient for accurate air quality prediction, particularly when compared to more advanced neural network models. RNN (Recurrent Neural Network) gives Average Accuracy: 99.79%. RNN models achieve the highest average accuracy, indicating their strong capability in handling sequential data and capturing temporal dependencies. This exceptional performance makes RNNs a highly effective choice for air quality prediction. Figure 5 depicts the comparison of average accuracy values of Air Quality prediction for LSTM, GRU, ARIMA, SARIMA and RNN models. We analyzed cases where models performed poorly, particularly in states like Uttar Pradesh for ARIMA and SARIMA. Key findings include:

- High volatility in daily PM2.5 levels led to poor ARIMA/SARIMA performance.
- States with more diverse geographical features (e.g., Uttar Pradesh) showed higher prediction errors across all models.
- RNN models were more robust to sudden spikes in pollution levels, possibly because of their capacity to capture long-term dependency..

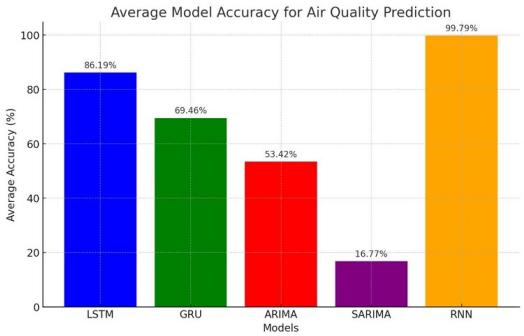

Figure 5: Average model accuracy for Air Quality prediction using ARIMA, SRIMA, RNN, LSTM and GRU

4.5 Statistical Significance

To determine the statistical significance of our findings, we used a paired t-test between the RNN and the other models. The RNN model showed significantly better performance ($p < 0.01$) compared to all other models across all states.

5 Conclusion

In summary, the study throughly examined the air quality patterns in India by employing advanced machine learning and deep learning techniques, including ARIMA, SARIMA, RNN, LSTM, and GRU models. The primary purpose of our research was to determine the effectiveness of such models for forecasting the quality of air in various states. It has been observed that RNN model shown superior performance when applied to time series data in comparison to conventional machine learning models. This work emphasises the efficacy of deep learning in predicting air quality and offers useful insights for future research and applications. However this work suffers from few limitations like Lack of consideration for external factors like industrial activities or traffic patterns, Limited exploration of ensemble methods combining statistical and deep learning approaches. Therefor the future direction of the work could include Incorporating additional data sources (e.g., satellite imagery, weather forecasts) to improve prediction accuracy, exploring transfer learning techniques to adapt models across different geographical regions, investigating the interpretability of deep learning algorithms to forecast air quality.

Sl. No.	STATES	LSTM	GRU	ARIMA	SARIMA	RNN
1	UTTAR PRADESH	79.32%	54.60%	-20.05%	1.96%	**99.53%**
2	MAHARASHTRA	88.84%	86.56%	60.58%	1.00%	**99.89%**
3	DELHI	84.04%	88.26%	28.38%	1.86%	**99.64%**
4	BIHAR	84.77	76.75%	59.20%	1.84%	**99.78%**
5	RAJASTHAN	85.13%	45.40%	52.21%	1.81%	**99.82%**
6	HARYANA	87.38	86.26%	44.60%	60.43%	**99.81%**
7	MADHYA PRADESH	86.19%	45.65%	57.34%	2.25%	**99.80%**
8	GUJARAT	84.19	87.09%	67.62%	84.26%	**99.86%**
9	TELANGANA	90.89%	45.50%	82.93%	0.81%	**99.88%**
10	WEST BENGAL	91.16%	78.50%	61.31%	11.44%	**99.89%**

Table 2: Comparative Performance of Different Models Across Top 10 States

References

[1] Dozdar Mahdi Ahmed, Masoud Muhammed Hassan, and Ramadhan J Mstafa. 2022. A review on deep sequential models for forecasting time series data. *Applied Computational Intelligence and Soft Computing* 2022, 1 (2022), 6596397.

[2] Khulood Albeladi, Bassam Zafar, and Ahmed Mueen. 2023. Time Series Forecasting using LSTM and ARIMA. *International Journal of Advanced Computer Science and Applications* 14, 1 (2023), 313–320.

[3] Adel Binbusayyis, Muhammad Attique Khan, and WR Emmanuel. 2024. A deep learning approach for prediction of air quality index in smart city. *Discover Sustainability* 5, 1 (2024), 1–23.

[4] George EP Box, Gwilym M Jenkins, Gregory C Reinsel, and Greta M Ljung. 2015. *Time series analysis: forecasting and control.* John Wiley & Sons.

[5] Angelo Casolaro, Vincenzo Capone, Gennaro Iannuzzo, and Francesco Camastra. 2023. Deep learning for time series forecasting: Advances and open problems. *Information* 14, 11 (2023), 598.

[6] Kyunghyun Cho, Bart Van Merriënboer, Caglar Gulcehre, Dzmitry Bahdanau, Fethi Bougares, Holger Schwenk, and Yoshua Bengio. 2014. Learning phrase representations using RNN encoder-decoder for statistical machine translation. *arXiv preprint arXiv:1406.1078* (2014).

[7] Sepp Hochreiter and Jürgen Schmidhuber. 1997. Long Short-term Memory. *Neural computation* 9 (12 1997), 1735–80. https://doi.org/10.1162/neco.1997.9.8.1735

[8] Rob J Hyndman and George Athanasopoulos. 2018. *Forecasting: principles and practice.* OTexts.

[9] Anurag Kanaujia, Madhulika Bhati, L. Sandhiya, Shiv Narayan Nishad, and Sujit Bhattacharya. 2022. Air Pollution in India: A Critical Assessment and Suggestive Pathways for Clean Air CSIR-NIScPR Discussion Paper Series.

[10] Manoj Kumar and Madhu Anand. 2014. An application of time series ARIMA forecasting model for predicting sugarcane production in India. *Studies in Business and Economics* 9, 1 (2014), 81–94.

[11] Hemi Luan and Zongwei Cai. 2023. Introduction to artificial intelligence and machine learning in environmental science. *Environmental Science: Advances* 2, 9 (2023), 1149–1150.

[12] John H Ludwig and BJ Steigerwald. 1965. Research in air pollution: current trends. *American Journal of Public Health and the Nations Health* 55, 7 (1965), 1082–1092.

[13] Ingo Lütkebohle. [n. d.]. BWorld Robot Control Software. https://www.kaggle.com/datasets/abhisheksjha/time-series-air-quality-data-of-india-2010-2023/data.

[14] Tanisha Madan, Shrddha Sagar, and Deepali Virmani. 2020. Air quality prediction using machine learning algorithms–a review. In *2020 2nd International Conference on Advances in Computing, Communication Control and Networking (ICACCCN)*. IEEE, 140–145.

[15] Ioannis Manisalidis, Elisavet Stavropoulou, Agathangelos Stavropoulos, and Eugenia Bezirtzoglou. 2020. Environmental and health impacts of air pollution: a review. *Frontiers in public health* 8 (2020), 14.

[16] Raydonal Ospina, João AM Gondim, Víctor Leiva, and Cecilia Castro. 2023. An overview of forecast analysis with ARIMA models during the COVID-19 pandemic: Methodology and case study in Brazil. *Mathematics* 11, 14 (2023), 3069.

[17] Betania Rahayu. 2024. Transformative Synergy: Machine Learning and Neural Networks in Environmental Science. *Asian Journal of Basic and Applied Sciences* 10, 01-2024 (2024).

[18] Md Mahbubur Rahman, Md Emran Hussain Nayeem, Md Shorup Ahmed, Khadiza Akther Tanha, Md Shahriar Alam Sakib, Khandaker Mohammad Mohi Uddin, and Hafiz Md Hasan Babu. 2024. AirNet: predictive machine learning model for air quality forecasting using web interface. *Environmental Systems Research* 13, 1 (2024), 44.

[19] Gokulan Ravindiran, Gasim Hayder, Karthick Kanagarathinam, Avinash Alagumalai, and Christian Sonne. 2023. Air quality prediction by machine learning models: A predictive study on the indian coastal city of Visakhapatnam. *Chemosphere* 338 (2023), 139518.

[20] David E Rumelhart, Geoffrey E Hinton, and Ronald J Williams. 1986. Learning representations by back-propagating errors. *nature* 323, 6088 (1986), 533–536.

[21] Pierre Sicard, Evgenios Agathokleous, Susan C Anenberg, Alessandra De Marco, Elena Paoletti, and Vicent Calatayud. 2023. Trends in urban air pollution over the last two decades: A global perspective. *Science of The Total Environment* 858 (2023), 160064.

[22] Huan Minh Tran, Feng-Jen Tsai, Yueh-Lun Lee, Jer-Hwa Chang, Li-Te Chang, Ta-Yuan Chang, Kian Fan Chung, Han-Pin Kuo, Kang-Yun Lee, Kai-Jen Chuang, et al. 2023. The impact of air pollution on respiratory diseases in an era of climate change: A review of the current evidence. *Science of the Total Environment* (2023), 166340.

[23] Khawaja Hassan Waseem, Hammad Mushtaq, Fazeel Abid, Adnan M Abu-Mahfouz, Asadullah Shaikh, Mehmet Turan, and Jawad Rasheed. 2022. Forecasting of air quality using an optimized recurrent neural network. *Processes* 10, 10 (2022), 2117.

[24] Ronald J Williams and David Zipser. 1989. A learning algorithm for continually running fully recurrent neural networks. *Neural computation* 1, 2 (1989), 270–280.