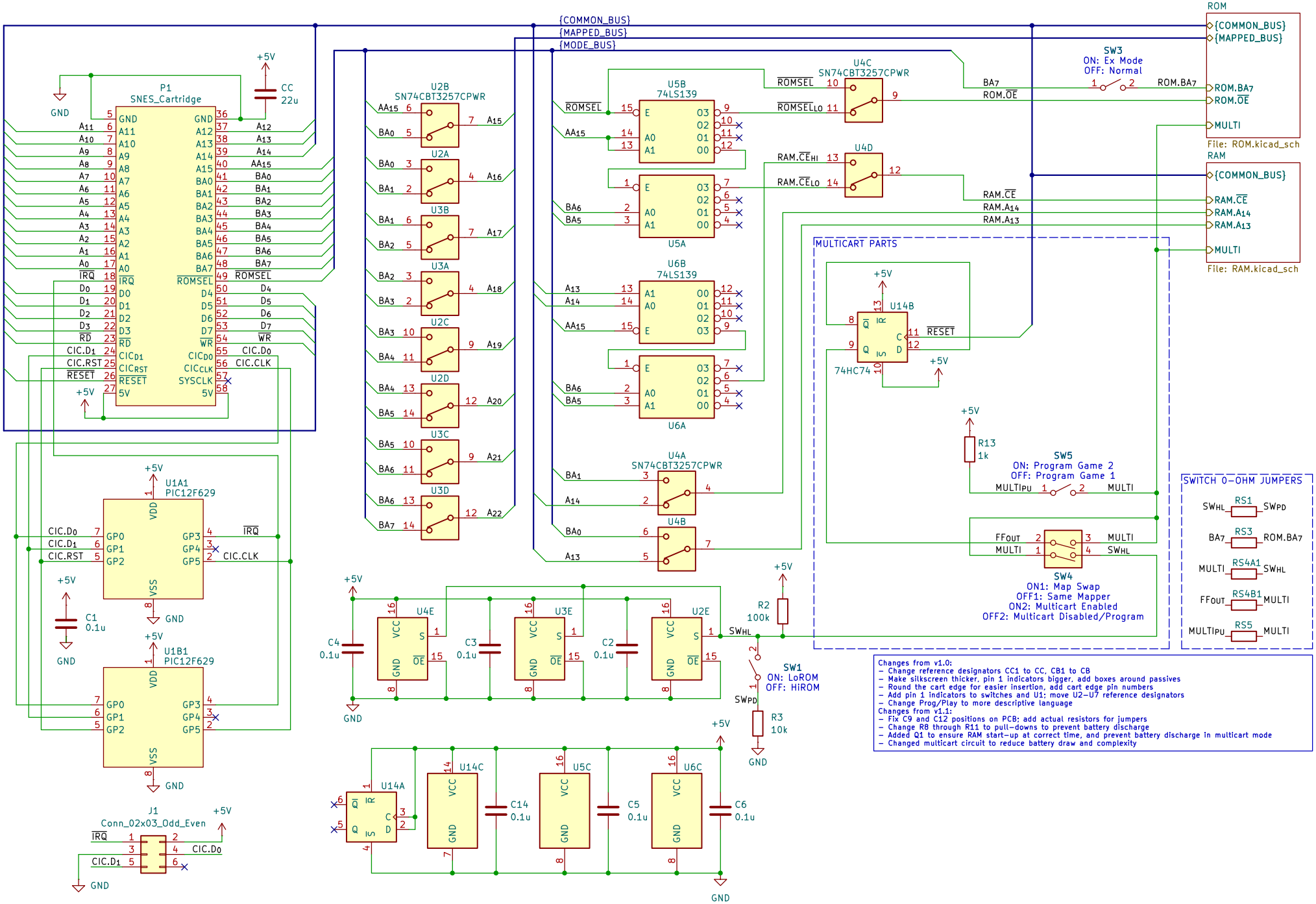
{COMMON_BUS}
{MAPPED_BUS}
{MODE_BUS}
P1
SNES_Cartridge
CC
22u
U2B
SN74CBT3257CPWR
U2A
U3B
U3A
U2C
U2D
U3C
U3D
U5B
74LS139
U5A
U6B
74LS139
U6A
U4C
SN74CBT3257CPWR
U4D
U4A
SN74CBT3257CPWR
U4B
ROM
File: ROM.kicad_sch
RAM
File: RAM.kicad_sch
SW3
ON: Ex Mode
OFF: Normal
MULTICART PARTS
U14B
74HC74
R13
1k
SW5
ON: Program Game 2
OFF: Program Game 1
SW4
ON1: Map Swap
OFF1: Same Mapper
ON2: Multicart Enabled
OFF2: Multicart Disabled/Program
SWITCH 0-OHM JUMPERS
U1A1
PIC12F629
U1B1
PIC12F629
C1
0.1u
C4
0.1u
C3
0.1u
C2
0.1u
U4E
U3E
U2E
R2
100k
SW1
ON: LoROM
OFF: HiROM
R3
10k
U14A
U14C
U5C
U6C
C14
0.1u
C5
0.1u
C6
0.1u
J1
Conn_02x03_Odd_Even
Changes from v1.0:
- Change reference designators CC1 to CC, CB1 to CB
- Make silkscreen thicker, pin 1 indicators bigger, add boxes around passives
- Round the cart edge for easier insertion, add cart edge pin numbers
- Add pin 1 indicators to switches and U1; move U2–U7 reference designators
- Change Prog/Play to more descriptive language
Changes from v1.1:
- Fix C9 and C12 positions on PCB; add actual resistors for jumpers
- Change R8 through R11 to pull-downs to prevent battery discharge
- Added Q1 to ensure RAM start-up at correct time, and prevent battery discharge in multicart mode
- Changed multicart circuit to reduce battery draw and complexity

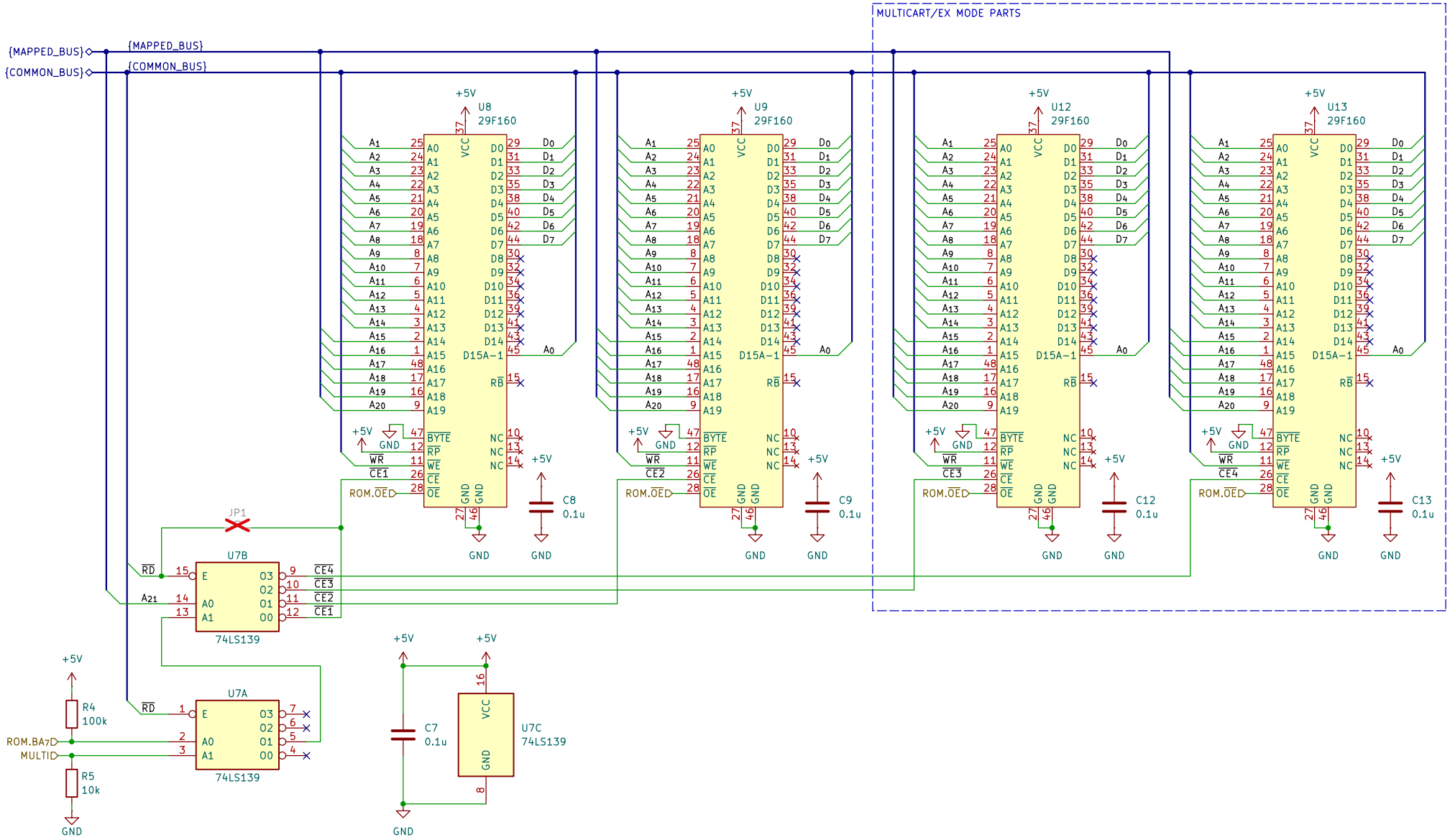
MULTICART/EX MODE PARTS
{MAPPED_BUS}
{COMMON_BUS}
U8
29F160
U9
29F160
U12
29F160
U13
29F160
+5V
GND
C8
0.1u
C9
0.1u
C12
0.1u
C13
0.1u
JP1
U7B
74LS139
U7A
74LS139
U7C
74LS139
C7
0.1u
R4
100k
R5
10k
ROM.BA7
MULTI
ROM.OE
RD
A21
CE1
CE2
CE3
CE4

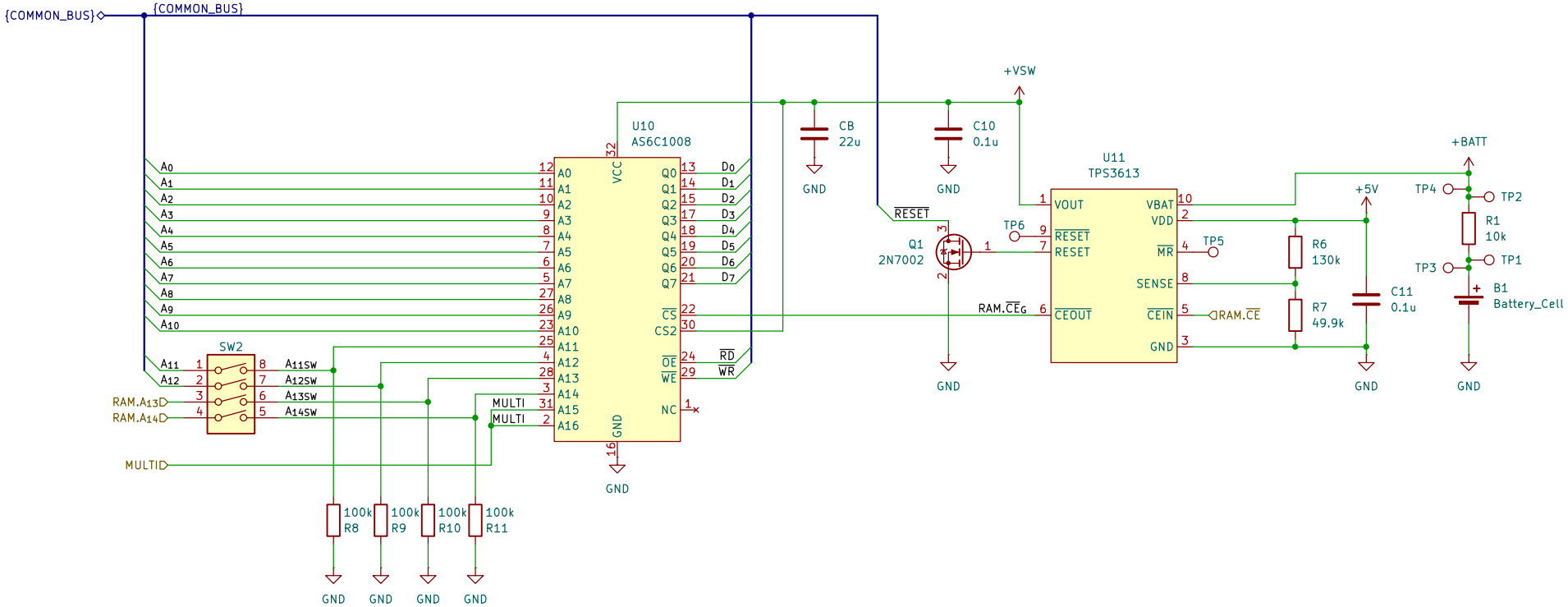

SWITCH 0-OHM JUMPERS

A11	RS2A1	A11SW
A12	RS2B1	A12SW
RAM.A13	RS2C1	A13SW
RAM.A14	RS2D1	A14SW