REVISION HISTORY			
REV	DESCRIPTION	DATE	APPROVED
A	Changed dim	3/1/2011	D Flickinger

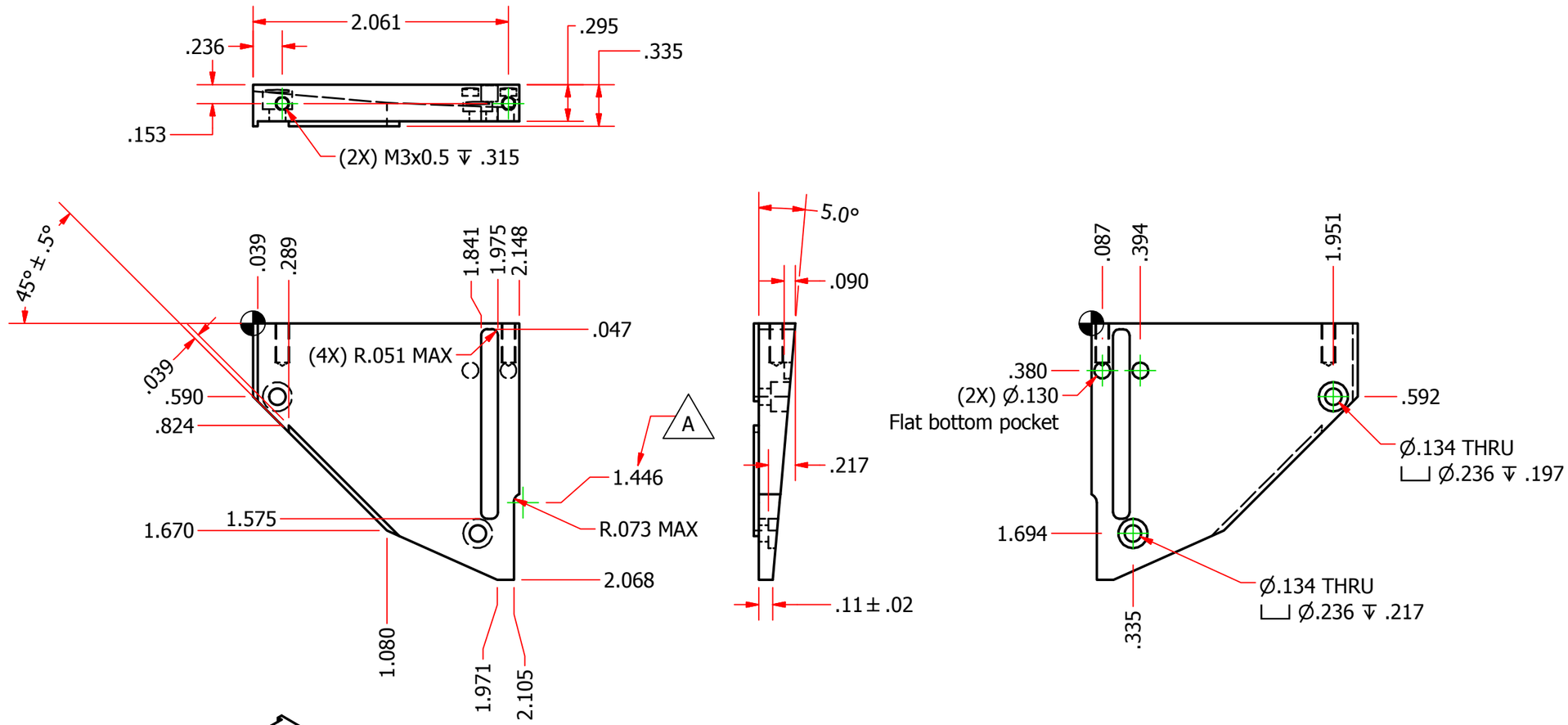

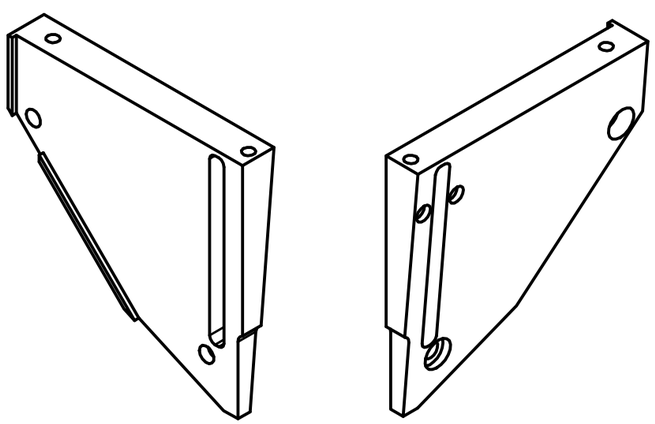

JANELIA FARM	**Description** Wall for large mirror holder, near side, with slot for adding large emission filter.		
PART # JF-SV-AF0021A			
PART FILENAME	DetPath_MirrorHolderWall_NearSide.ipt		
MATERIAL Aluminum, black matte anodized			**UNITS** inch
DRAWN BY D. Flickinger	**SCALE** 1:1	**DATE** 5/31/2006	**PAGE** 1 of 1

TOLERANCES:

#.## ↔ ±0.05
#.### ↔ ±0.005
#.#### ↔ ±0.002
∠ # ↔ ±1°