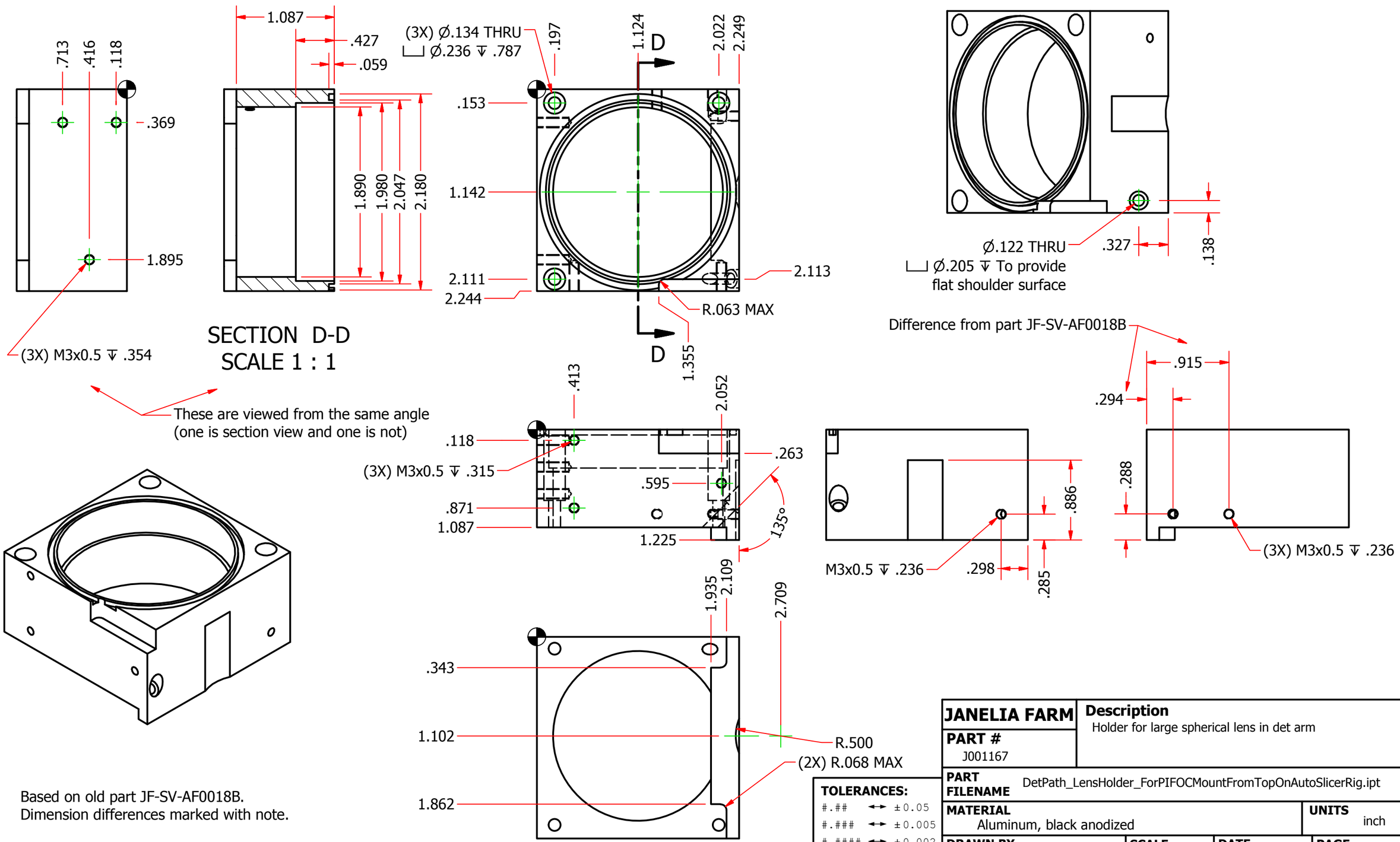

Based on old part JF-SV-AF0018B.
Dimension differences marked with note.

TOLERANCES:

#.##	↔	±0.05
#.###	↔	±0.005
#.####	↔	±0.002
∠ #°	↔	±1°

JANELIA FARM	**Description** Holder for large spherical lens in det arm		
PART # J001167			
PART FILENAME	DetPath_LensHolder_ForPIFOCMountFromTopOnAutoSlicerRig.ipt		
MATERIAL Aluminum, black anodized			**UNITS** inch
DRAWN BY D. Flickinger	**SCALE** 1:1	**DATE** 2/4/2008	**PAGE** 1 of 1