| REVISION HISTORY | | | |
|---|---|---|---|
| REV | DESCRIPTION | DATE | AUTHOR |
| - | INITIAL RELEASE | 10/3/2012 | |

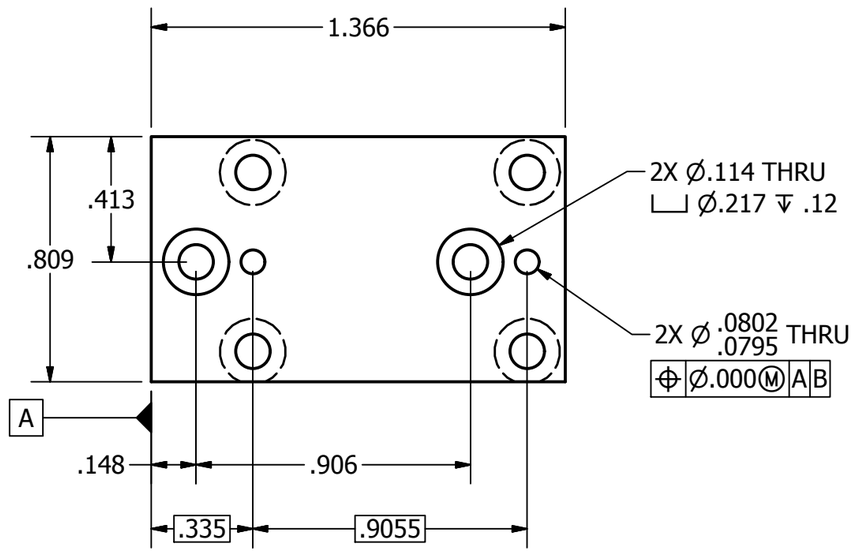


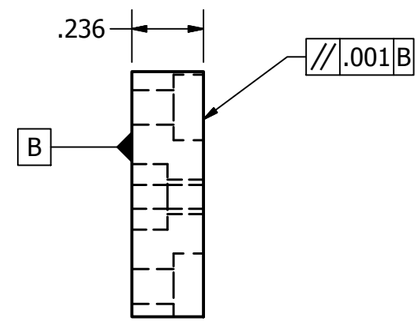


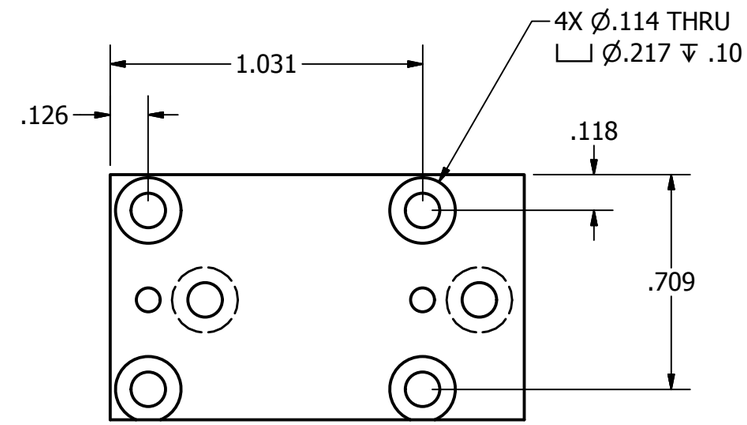


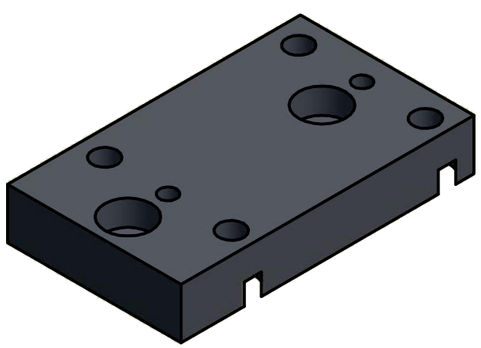

NOTES: UNLESS OTHERWISE SPECIFIED
1. INTERPRET DIMENSION AND TOLERANCES PER ASME Y14.5M-1994.
2. DEBURR AND BREAK ALL SHARP EDGES, MAX 0.010 UNLESS OTHERWISE INDICATED.
3. PARTS ARE TO BE CLEAN AND FREE OF OIL, GREASE, AND OTHER CONTAMINANTS.

| TOLERANCES IN INCHES UNLESS OTHERWISE NOTED | |
|---|---|
| .X | ± 0.03 |
| X.XX | ± 0.010 |
| X.XXX | ± 0.005 |
| X.XXXX | ± 0.0005 |
| ANGULAR+/- 0.5 DEG | |

DRAWN D. Flickinger 3/26/2011

MATERIAL ALUMINUM, 6061-T651

FINISH Black, matte anodized

SURFACE TEXTURE 32

DIMENSIONS INCLUDE CHEMICALLY APPLIED FINISHES

THIS DRAWING IS NOT TO BE USED OR REPRODUCED WITHOUT PERMISSION FROM THE HOWARD HUGHES MEDICAL INSTITUTE

THIRD ANGLE PROJECTION:

HHMI HOWARD HUGHES MEDICAL INSTITUTE

janelia farm research campus

DESCRIPTION

Bracket for PIFOC on MIMMS det arm, part 2

| SIZE | PART NO | REV |
|---|---|---|
| B | JF-XX-MI0023 | - |

MODEL FILE PiezoZ-ScanBracket_Pt2.ipt

SHEET 1 OF 1