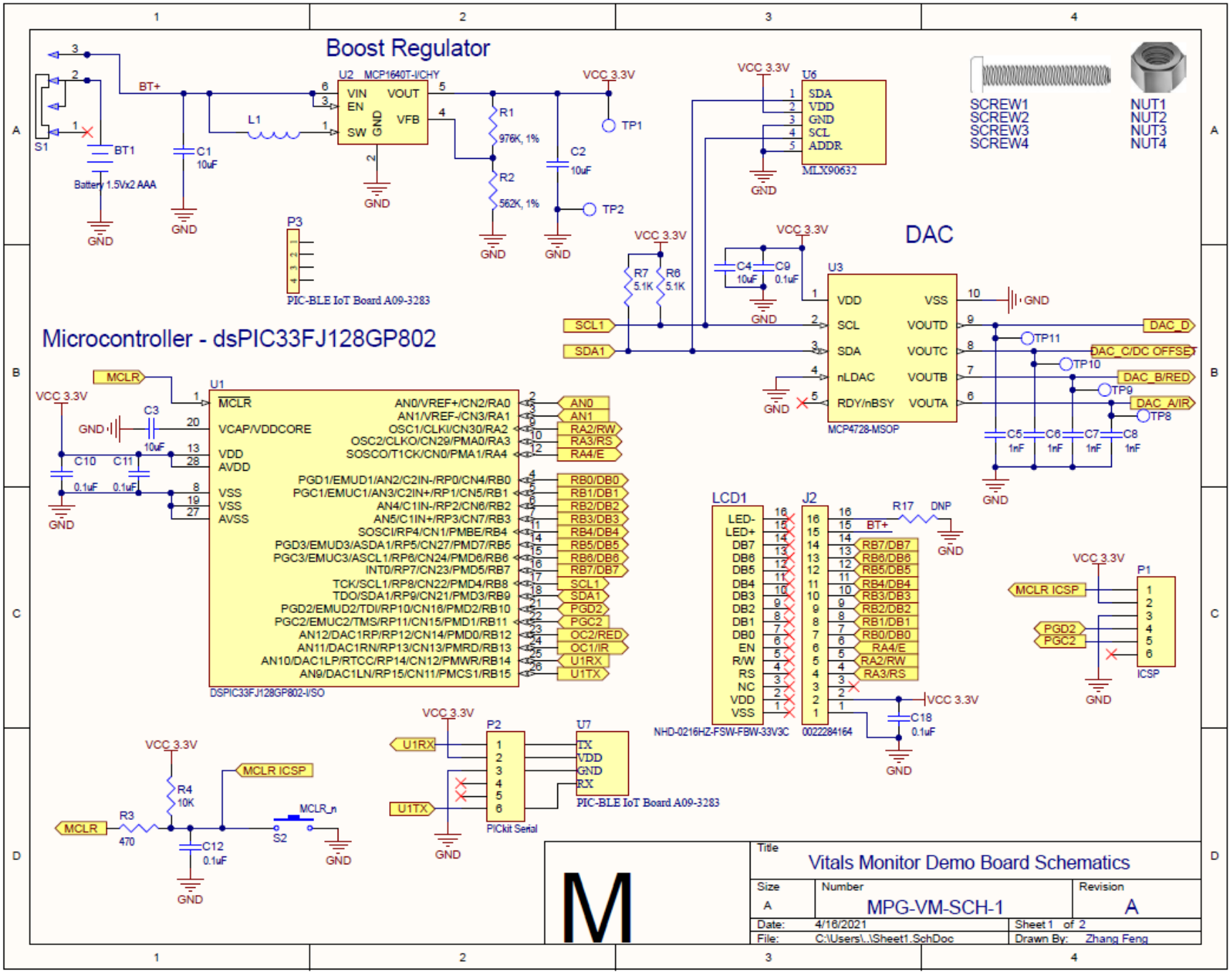
Boost Regulator
U2 MCP1640T-I/CHY
VIN
EN
SW
GND
VOUT
VFB
BT+
L1
R1
976K, 1%
R2
562K, 1%
C1
10uF
C2
10uF
VCC 3.3V
TP1
TP2
S1
BT1
Battery 1.5Vx2 AAA
P3
PIC-BLE IoT Board A09-3283
U6
SDA
VDD
GND
SCL
ADDR
MLX90632
SCREW1
SCREW2
SCREW3
SCREW4
NUT1
NUT2
NUT3
NUT4
DAC
U3
VDD
SCL
SDA
nLDAC
RDY/nBSY
VSS
VOUTD
VOUTC
VOUTB
VOUTA
MCP4728-MSOP
R7
5.1K
R6
5.1K
C4
10uF
C9
0.1uF
SCL1
SDA1
DAC_D
DAC_C/DC OFFSET
DAC_B/RED
DAC_A/IR
TP11
TP10
TP9
TP8
C5
1nF
C6
1nF
C7
1nF
C8
1nF
Microcontroller - dsPIC33FJ128GP802
U1
MCLR
VCAP/VDDCORE
VDD
AVDD
VSS
AVSS
C3
10uF
C10
0.1uF
C11
0.1uF
AN0/VREF+/CN2/RA0
AN1/VREF-/CN3/RA1
OSC1/CLKI/CN30/RA2
OSC2/CLKO/CN29/PMA0/RA3
SOSCO/T1CK/CN0/PMA1/RA4
PGD1/EMUD1/AN2/C2IN-/RP0/CN4/RB0
PGC1/EMUC1/AN3/C2IN+/RP1/CN5/RB1
AN4/C1IN-/RP2/CN6/RB2
AN5/C1IN+/RP3/CN7/RB3
SOSCI/RP4/CN1/PMBE/RB4
PGD3/EMUD3/ASDA1/RP5/CN27/PMD7/RB5
PGC3/EMUC3/ASCL1/RP6/CN24/PMD6/RB6
INT0/RP7/CN23/PMD5/RB7
TCK/SCL1/RP8/CN22/PMD4/RB8
TDO/SDA1/RP9/CN21/PMD3/RB9
PGD2/EMUD2/TDI/RP10/CN16/PMD2/RB10
PGC2/EMUC2/TMS/RP11/CN15/PMD1/RB11
AN12/DAC1RP/RP12/CN14/PMD0/RB12
AN11/DAC1RN/RP13/CN13/PMRD/RB13
AN10/DAC1LP/RTCC/RP14/CN12/PMWR/RB14
AN9/DAC1LN/RP15/CN11/PMCS1/RB15
AN0
AN1
RA2/RW
RA3/RS
RA4/E
RB0/DB0
RB1/DB1
RB2/DB2
RB3/DB3
RB4/DB4
RB5/DB5
RB6/DB6
RB7/DB7
SCL1
SDA1
PGD2
PGC2
OC2/RED
OC1/IR
U1RX
U1TX
DSPIC33FJ128GP802-I/SO
LCD1
LED-
LED+
DB7
DB6
DB5
DB4
DB3
DB2
DB1
DB0
EN
R/W
RS
NC
VDD
VSS
NHD-0216HZ-FSW-FBW-33V3C
J2
0022284164
R17
DNP
C18
0.1uF
P1
MCLR ICSP
ICSP
R4
10K
R3
470
C12
0.1uF
MCLR_n
S2
P2
PICkit Serial
U7
TX
VDD
GND
RX
PIC-BLE IoT Board A09-3283
Title
Vitals Monitor Demo Board Schematics
Size
A
Number
MPG-VM-SCH-1
Revision
A
Date: 4/16/2021
Sheet 1 of 2
File: C:\Users\..\Sheet1.SchDoc
Drawn By: Zhang Feng

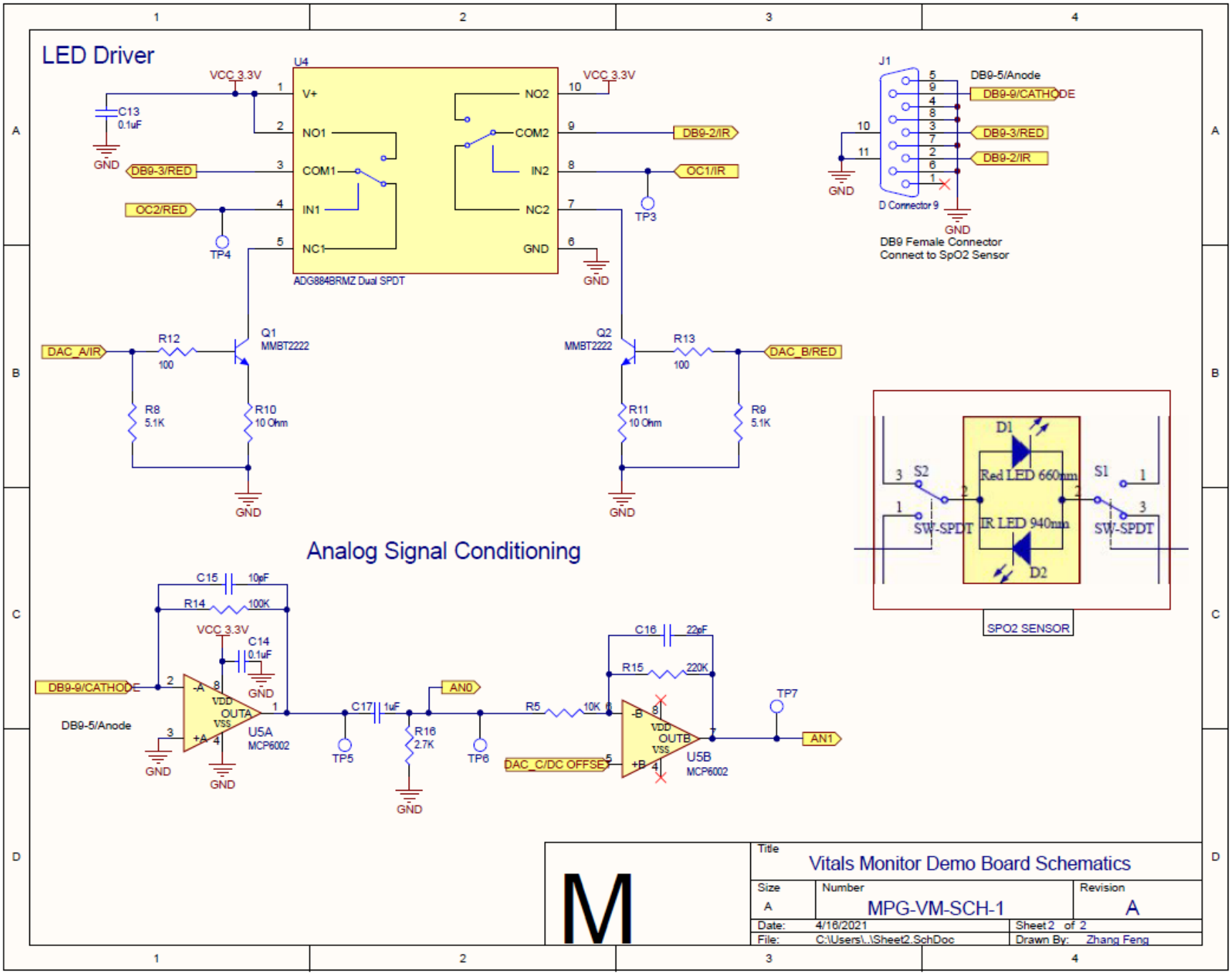
LED Driver
U4
VCC 3.3V
C13
0.1uF
GND
DB9-3/RED
OC2/RED
V+
NO1
COM1
IN1
NC1
NO2
COM2
IN2
NC2
GND
DB9-2/IR
OC1/IR
TP3
TP4
ADG884BRMZ Dual SPDT
J1
DB9-5/Anode
DB9-9/CATHODE
DB9-3/RED
DB9-2/IR
D Connector 9
DB9 Female Connector
Connect to SpO2 Sensor
DAC_A/IR
R12
100
Q1
MMBT2222
R8
5.1K
R10
10 Ohm
Q2
MMBT2222
R13
100
DAC_B/RED
R11
10 Ohm
R9
5.1K
D1
Red LED 660nm
IR LED 940nm
D2
S2
S1
SW-SPDT
SPO2 SENSOR
Analog Signal Conditioning
C15
10pF
R14
100K
C14
0.1uF
DB9-9/CATHODE
DB9-5/Anode
VDD
OUTA
VSS
U5A
MCP6002
C17
1uF
AN0
R16
2.7K
TP5
TP6
R5
10K
C16
22pF
R15
220K
DAC_C/DC OFFSET
OUTB
U5B
MCP6002
TP7
AN1
M
Title
Vitals Monitor Demo Board Schematics
Size
A
Number
MPG-VM-SCH-1
Revision
A
Date: 4/16/2021
Sheet 2 of 2
File: C:\Users\..\Sheet2.SchDoc
Drawn By: Zhang Feng