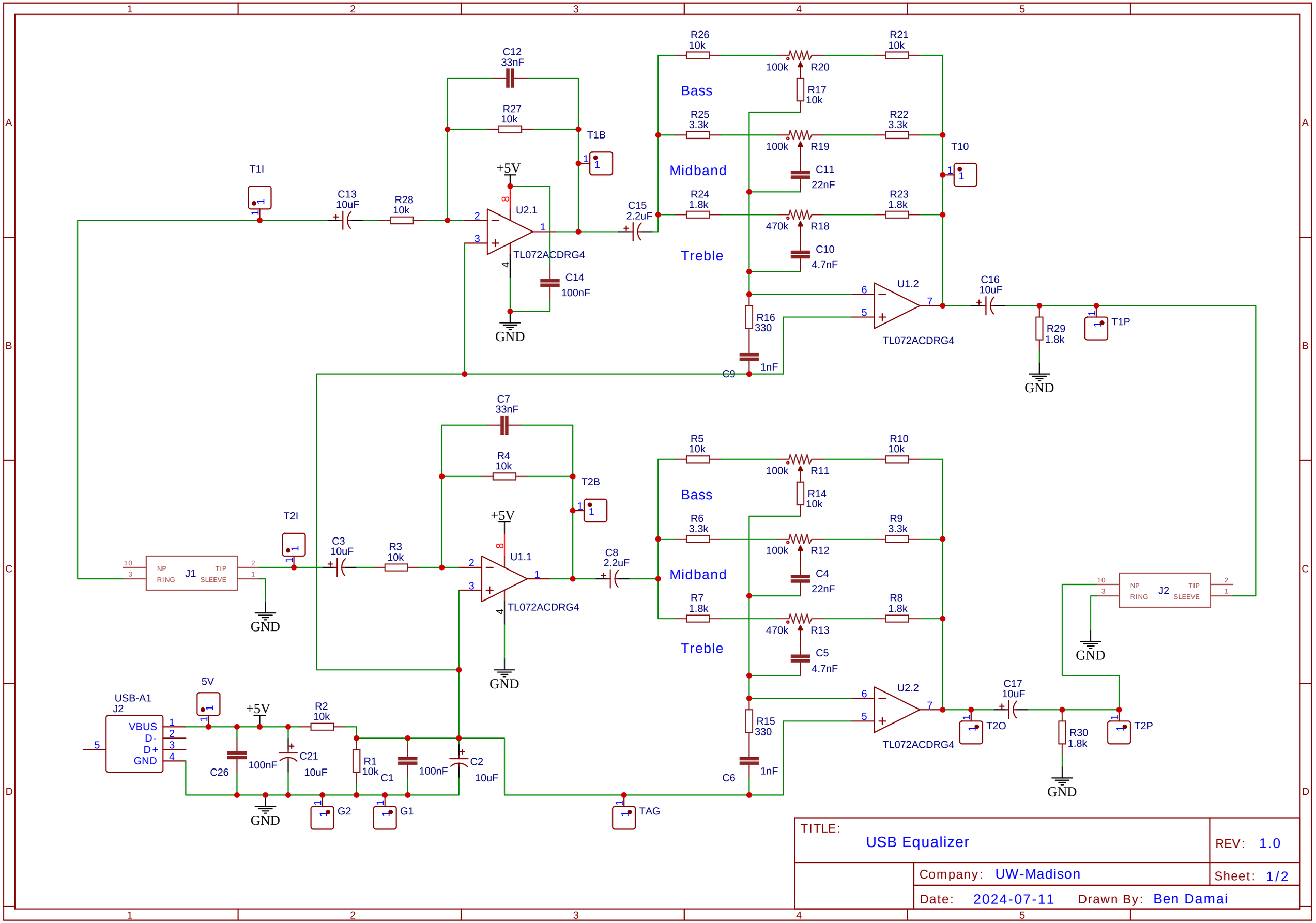

TITLE: USB Equalizer	REV: 1.0
Company: UW-Madison	Sheet: 1/2
Date: 2024-07-11 Drawn By: Ben Damai	