University of Frontier Technology, Bangladesh

শিক্ষা নিয়ে গড়ব দেশ তথ্য-প্রযুক্তির বাংলাদেশ

Project Report

Course: IRE 308 - System Design, Engineering and Testing Sessional

SUBMITTED BY

Name	ID
MD. ASIF HREEDOY	2201031
Md. MAKSUDUL AHASAN RIYAD	2201029

University of Frontier Technology, Bangladesh

SUBMITTED TO

NAME: Mostafiz Ahammed

Leacturer

Department of – IRE

University of Frontier Technology, Bangladesh

Design and Implementation of a Dual mode (Manual and Automatic) Fire-Fighting Robot Using ESP8266

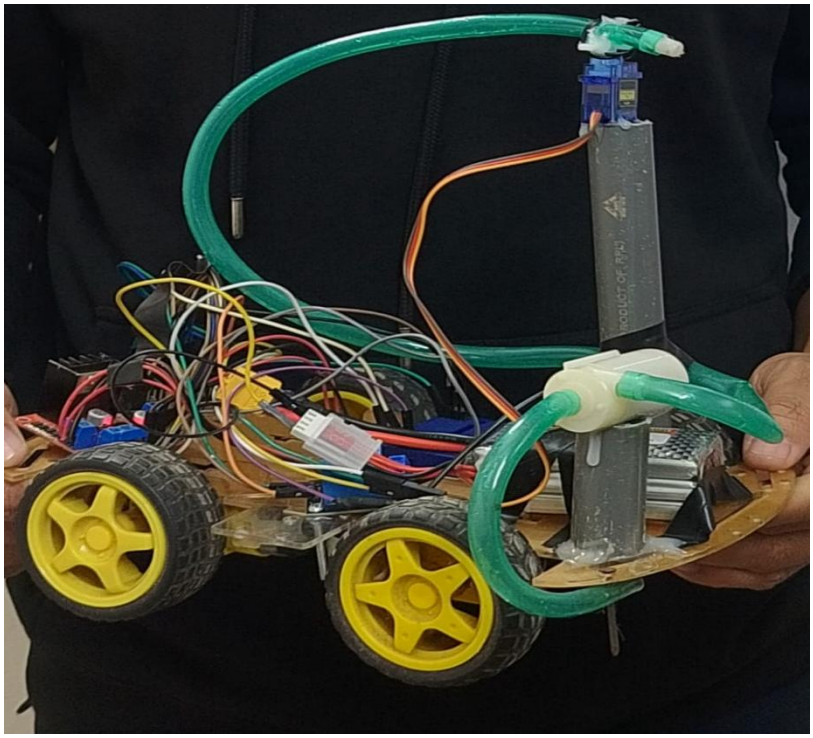

1. Executive Summary

This project presents the development of a dual-mode fire-fighting robotic system capable of both manual remote operation and autonomous fire detection and suppression. The system leverages IoT technology through an ESP8266 microcontroller to provide wireless web-based control, while integrating sensor-based automation for immediate response to fire emergencies. The robot is designed to navigate toward fire sources using flame sensors and activate a water suppression system, demonstrating a practical application of embedded systems, robotics, and IoT for enhancing safety in hazardous environments.

2. Introduction

Fire emergencies present significant risks to human life, property, and critical infrastructure. In many scenarios, direct human intervention is dangerous or impractical. Robotic fire-fighting systems offer a viable solution by performing initial reconnaissance and suppression tasks, thereby reducing risk to human responders. This project aims to design and implement a cost-effective, modular robotic platform that combines human oversight with autonomous emergency response.

The integration of manual control ensures operational flexibility, while the autonomous mode provides a fail-safe mechanism for rapid reaction to detected fires. This system serves as both an educational platform for robotics and IoT and a prototype for real-world safety applications.

3. Project Objectives

- To design and fabricate a mobile robotic platform integrated with fire suppression capabilities.
- To implement wireless control via a custom web server hosted on the ESP8266.
- To develop two distinct manual control schemes: Press and Hold modes for user preference.
- To integrate a flame sensor for reliable fire detection within a defined range.
- To program an autonomous routine that overrides manual control upon fire detection, navigating toward the fire and activating the water pump.
- To ensure system robustness with independent power supplies for control and drive systems.

4. System Architecture

The system is built around the ESP8266 NodeMCU, which acts as the central processing and communication unit. It hosts a web server for the manual control interface and processes input from the flame sensor. In manual mode, commands from the user interface are executed to control motors and the pump. In automatic mode, sensor input triggers a pre-programmed emergency routine. The L298N motor driver facilitates bi-directional control of the DC gear motors, and a relay module acts as a switch for the high-current water pump.

- Figure of System Architecture:

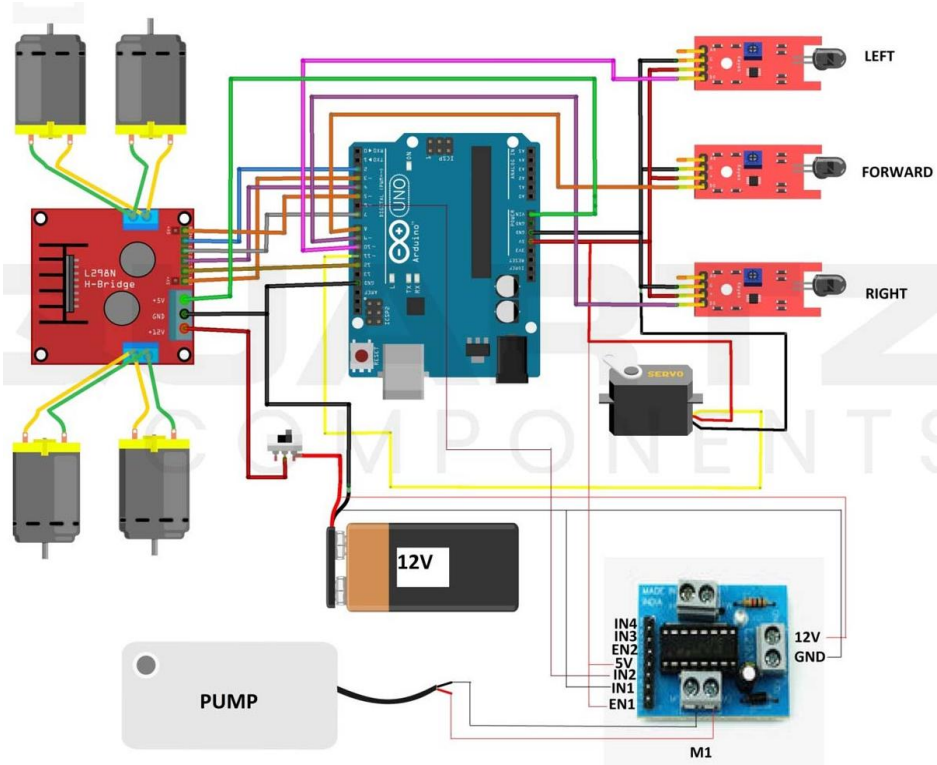

Figure: 4.1

- System Block Diagram:

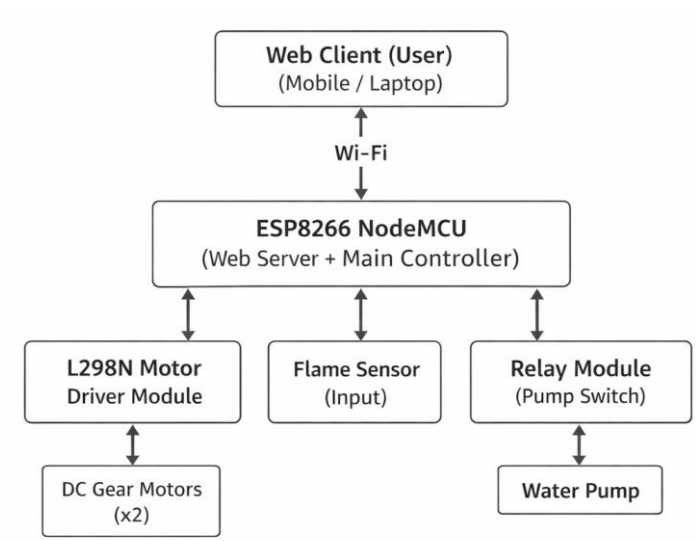

Figure: 4.2

5. Detailed Hardware Design

❖ Control Unit: ESP8266 NodeMCU:

- **Function:** WiFi communication, web server hosting, sensor data processing, and system control logic.
- **Justification:** Chosen for its integrated WiFi, sufficient GPIO pins, and compatibility with the Arduino ecosystem.

❖ Motion System:

- **Motors:** 2 x 12V DC Geared Motors for high torque.
- **Driver:** L298N Dual H-Bridge Motor Driver Module.
- **Chassis:** A custom-designed or kit-based 2-wheel differential drive platform with a caster wheel for balance.

❖ Fire Detection Subsystem:

- **Sensor:** Infrared (IR) Flame Sensor Module.
- **Operation:** Detects specific IR wavelengths (760nm - 1100nm) emitted by flames. Provides a digital (HIGH/LOW) output to the microcontroller.
- **Placement:** Mounted on the front of the robot for forward detection.

❖ 5.4 Fire Suppression Subsystem:

- **Actuator:** 5V or 12V DC Submersible Water Pump.
- **Control:** A 5V Relay Module isolates the low-voltage ESP8266 from the high-current pump circuit.
- **Reservoir:** A mounted water container with tubing directed to the front nozzle.

❖ Power Management:

- **Dual Supply Design:**

    - **Logic Supply:** A 5V power from motor driver for the ESP8266 and sensors.

- **Drive Supply:** A separate 12V battery pack (e.g., Li-ion or Lead-Acid) for the motors and pump.
- **Purpose:** Prevents voltage drops and resets in the control unit caused by motor startup currents.

6. Software & Firmware Design

❖ 6.1 Development Environment

➢ Arduino IDE with the ESP8266 Board Package.

❖ Core Program Logic

➢ The firmware follows a state-based logic flow:

1. **Initialization:** Connects to WiFi, starts the web server, initializes GPIO pins.
2. **Main Loop:**

    - **Sensor Polling:** Continuously reads the digital state of the flame sensor.
    - **Automatic Mode Priority:** If flame is detected (`LOW` signal), the system immediately enters the **Autonomous Fire-Fighting Routine**, overriding any manual commands.
    - **Manual Mode:** If no flame is detected, the system listens for HTTP requests from the web client and executes movement/pump commands accordingly.

❖ Web-Based User Interface (UI)

The ESP8266 serves an HTML page that forms the control dashboard. Key UI features include:

➢ **Mode Selector:** Buttons to switch between **"Press Mode"** (momentary action) and **"Touch Mode"** (latching action).
➢ **Movement Controls:** Directional buttons (Forward, Backward, Left, Right, Stop).
➢ **Pump Control:** Dedicated ON/OFF button for the water pump.
➢ **Status Indicator:** Shows connection status and active mode.

❖ Autonomous Routine Algorithm

When fire is detected:

- **Interrupt Manual Control:** Disables web command processing.
- **Navigate:** Commands the motors to move FORWARD toward the fire source.
- **Activate Suppression:** Engages the relay to turn ON the water pump.
- **Persist:** Continues this action for a predefined duration or until the flame sensor no longer detects fire (indicating suppression).
- **Return to Manual:** Resumes normal operation and awaits manual commands.

7. Implementation & Testing

❖ Prototype Assembly:

The hardware components were systematically mounted on the chassis. Wiring was carefully managed to avoid interference, with particular attention paid to separating power lines from signal lines.

❖ Functional Testing Phases

- **Unit Testing:** Individual components (motor movement, sensor response, pump activation) were tested in isolation.
- **Integration Testing:** The complete system was tested, focusing on the switch between manual and automatic modes.
- **Scenario Testing:** Controlled fire simulations (using a candle) were conducted to validate the autonomous detection and response sequence.

8. Results & Discussion

The project successfully resulted in a functional prototype that meets all core objectives:

- The web interface provides responsive control over both movement and pump with less than 1-second latency in a stable network.
- The flame sensor reliably detects a standard candle flame at distances up to 1.5 meters in low ambient light.

- The autonomous routine successfully overrides manual control and initiates the fire-fighting sequence within 2-3 seconds of detection.
- The dual-power system proved essential for stable operation, eliminating controller resets during motor operation.

9. Applications

- **Educational Demonstrator:** For courses in IoT, Embedded Systems, and Robotics.
- **Indoor Safety Prototype:** Potential for use in small-scale environments like server rooms, kitchens, or workshops.
- **Research Platform:** Foundation for advanced research in multi-sensor fusion, path planning, and computer vision for fire robotics.

10. Advantages

- **Dual-Mode Flexibility:** Combines human decision-making with automated emergency response.
- **Cost-Effective:** Built using affordable, widely available components.
- **Remote Operation:** Eliminates the need for physical proximity to the hazard.
- **Modular Design:** Sensors and actuators can be easily upgraded or replaced.

11. Limitations & Challenges

- **Limited Detection Scope:** The single forward-facing sensor cannot locate the direction or size of the fire; it only detects presence/absence ahead.
- **Environmental Dependence:** Flame sensor accuracy can be affected by strong ambient IR light (e.g., sunlight).
- **Basic Navigation:** The autonomous routine is simplistic (move forward only), lacking obstacle avoidance or true fire-seeking logic.
- **Water Capacity:** The onboard water reservoir has a very limited volume, suitable for demonstration only.

12. Future Enhancements

- **Advanced Sensing:** Integrate an array of flame sensors for directional bearing or a thermal camera for spatial fire mapping.

- **Intelligent Navigation:** Implement an Active Fire Seeking Algorithm using sensor feedback to turn and locate the fire's center.
- **Obstacle Avoidance:** Incorporate ultrasonic or IR proximity sensors to navigate around obstacles autonomously.
- **Enhanced Communication:** Stream live video via an ESP32-CAM module for improved situational awareness.
- **Improved Power:** Utilize higher-capacity batteries and implement a battery monitoring system.
- **Professional Enclosure:** Design a 3D-printed or molded fire/heat-resistant casing for the electronics.

13. Conclusion

This project successfully demonstrates the integration of IoT connectivity with autonomous robotic control to create a functional fire-fighting robot. The ESP8266-based system effectively bridges user-controlled operation and sensor-driven emergency response, providing a versatile and safety-oriented platform. While the prototype has limitations in scope and capacity, it conclusively validates the core concept and provides a robust framework for future development. The project underscores the potential of low-cost, intelligent robotic systems in enhancing human safety and serves as a comprehensive learning tool in modern engineering disciplines.

14. References

1. **Lee, Y., & Park, J. (2024).** "*Edge-Computing Enabled Autonomous Firefighting Robots with Multi-Sensor Fusion.*" IEEE Internet of Things Journal, 11(3), 2567-2580.
2. **Wang, Q., et al. (2024).** *"Low-Cost Autonomous Fire Inspection Robots Using ESP32 and Deep Learning."* Robotics and Computer-Integrated Manufacturing, 85, 102634.Arduino LLC. (2023). *Arduino Programming Language Reference*.
3. **Kumar, A., & Singh, R. (2024).** "*Real-Time Fire Detection System Using Infrared Sensors and IoT Platform for Smart Safety Applications.*" Sensors, 24(2), 567.
4. **Martinez, C., et al. (2023).** "*Hybrid Control Architecture for Emergency Response Robots: Combining Teleoperation and Autonomy.*" Journal of Field Robotics, 40(8), 1987-2005.