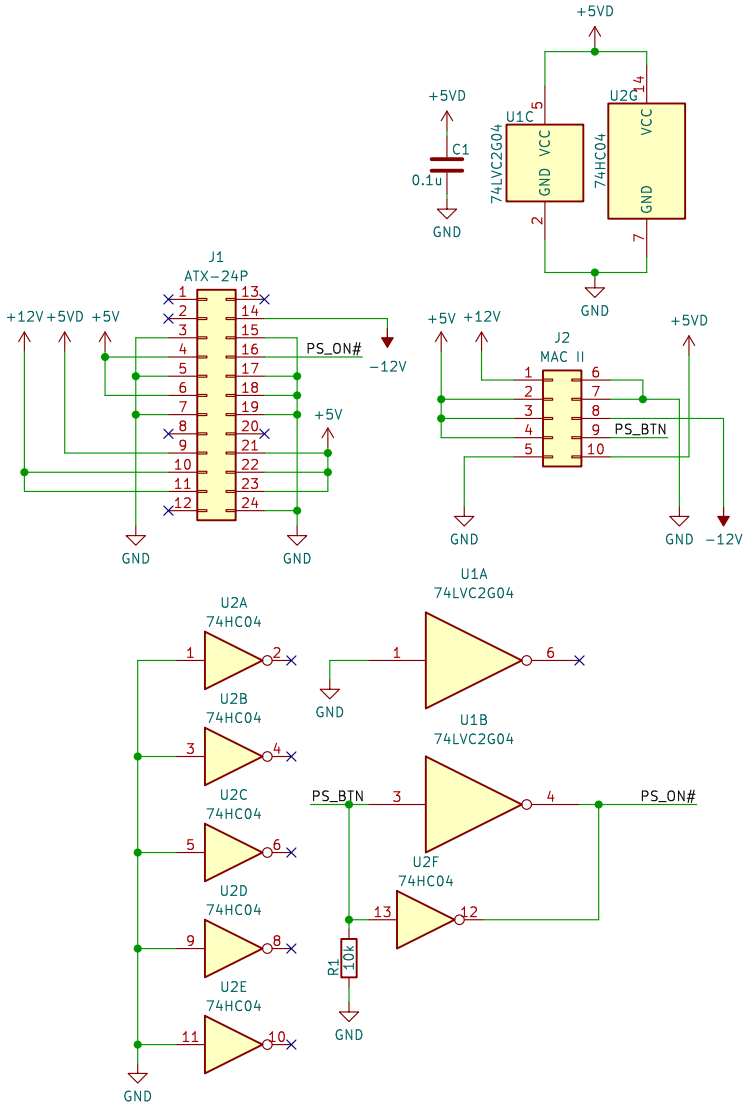

Note: Only populate one inverter

JAchan

Sheet: /

File: MacIIATX.kicad_sch

Title: Mac II to ATX PSU adapter

Size: A4	Date: 2023-11-14	**Rev: V1**
KiCad E.D.A. kicad 7.0.8+dfsg-1		Id: 1/1