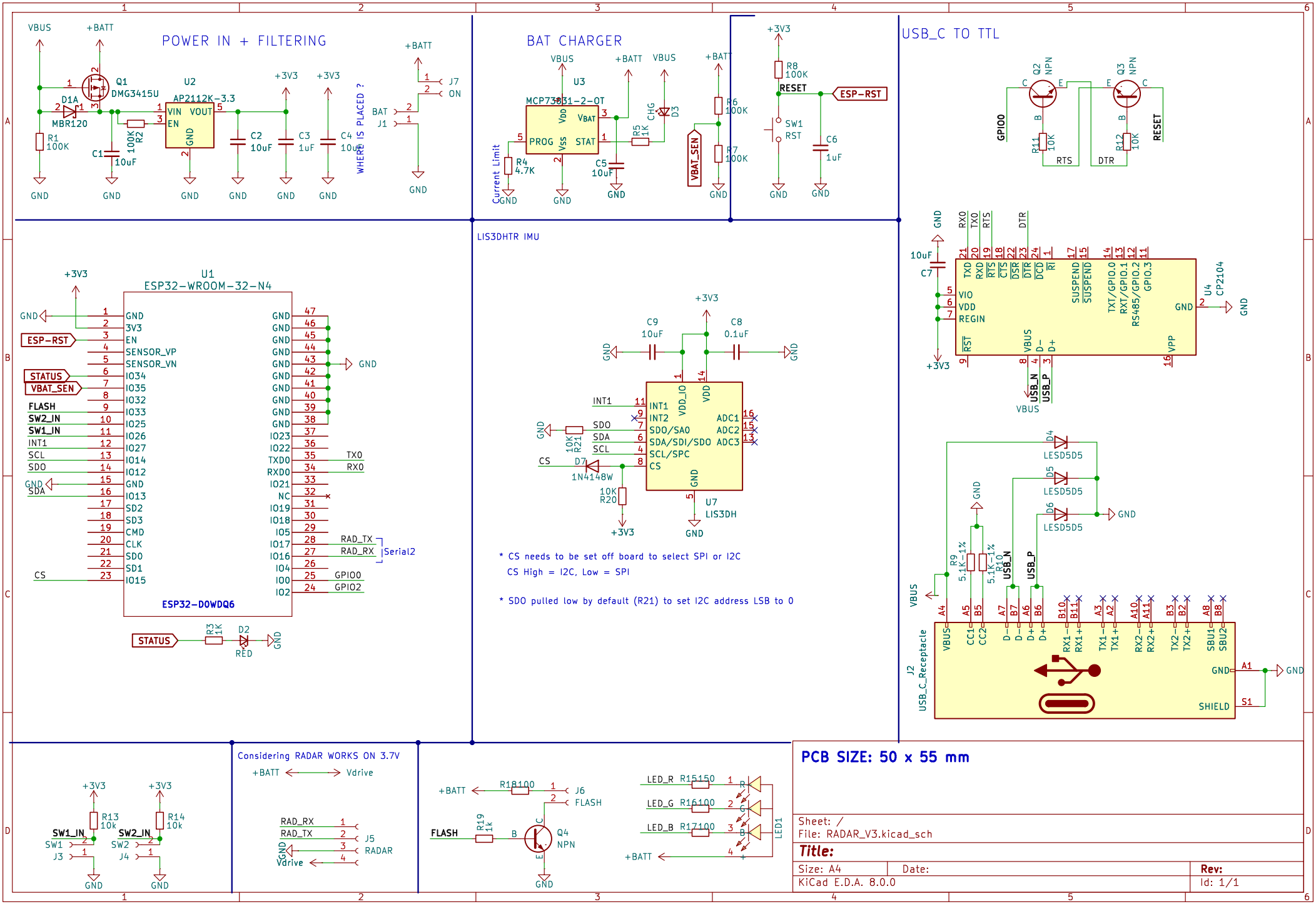
POWER IN + FILTERING
VBUS
+BATT
Q1
DMG3415U
D1A
MBR120
R1
100K
R2
100K
C1
10uF
U2
AP2112K-3.3
VIN
VOUT
EN
GND
C2
10uF
C3
1uF
C4
10uF
+3V3
WHERE IS PLACED ?
J7
ON
BAT
J1
GND
BAT CHARGER
U3
MCP73831-2-OT
VDD
VBAT
PROG
VSS
STAT
R5
1K
CHG
D3
C5
10uF
R4
4.7K
Current Limit
R6
100K
R7
100K
VBAT_SEN
R8
100K
RESET
ESP-RST
SW1
RST
C6
1uF
USB_C TO TTL
Q2
NPN
Q3
NPN
GPIO0
R11
10K
RTS
DTR
R12
10K
RESET
C7
10uF
CP2104
U4
TXD
RXD
RTS
CTS
DSR
DTR
DCD
RI
SUSPEND
SUSPEND
TXT/GPIO.0
RXT/GPIO.1
RS485/GPIO.2
GPIO.3
VIO
VDD
REGIN
RST
VBUS
D-
D+
VPP
USB_N
USB_P
U1
ESP32-WROOM-32-N4
GND
3V3
EN
SENSOR_VP
SENSOR_VN
IO34
IO35
IO32
IO33
IO25
IO26
IO27
IO14
IO12
IO13
SD2
SD3
CMD
CLK
SD0
SD1
IO15
IO23
IO22
TXD0
RXD0
IO21
NC
IO19
IO18
IO5
IO17
IO16
IO4
IO0
IO2
ESP-RST
STATUS
VBAT_SEN
FLASH
SW2_IN
SW1_IN
INT1
SCL
SDO
SDA
CS
TX0
RX0
RAD_TX
RAD_RX
Serial2
GPIO0
GPIO2
ESP32-D0WDQ6
R3
1K
D2
RED
LIS3DHTR IMU
C9
10uF
C8
0.1uF
INT1
INT2
SDO/SA0
SDA/SDI/SDO
SCL/SPC
CS
VDD_IO
VDD
ADC1
ADC2
ADC3
R21
10K
D7
1N4148W
R20
10K
U7
LIS3DH
* CS needs to be set off board to select SPI or I2C
CS High = I2C, Low = SPI
* SDO pulled low by default (R21) to set I2C address LSB to 0
D4
LESD5D5
D5
LESD5D5
D6
LESD5D5
R9
5.1K-1%
R10
5.1K-1%
J2
USB_C_Receptacle
VBUS
CC1
CC2
D-
D+
RX1-
RX1+
TX1-
TX1+
RX2-
RX2+
TX2-
TX2+
SBU1
SBU2
SHIELD
S1
SW1_IN
SW2_IN
R13
10k
R14
10k
SW1
SW2
J3
J4
Considering RADAR WORKS ON 3.7V
+BATT
Vdrive
RAD_RX
RAD_TX
J5
RADAR
R18100
J6
FLASH
R19
1k
Q4
NPN
LED_R
LED_G
LED_B
R15150
R16100
R17100
LED1
PCB SIZE: 50 x 55 mm
Sheet: /
File: RADAR_V3.kicad_sch
Title:
Size: A4
Date:
Rev:
KiCad E.D.A. 8.0.0
Id: 1/1