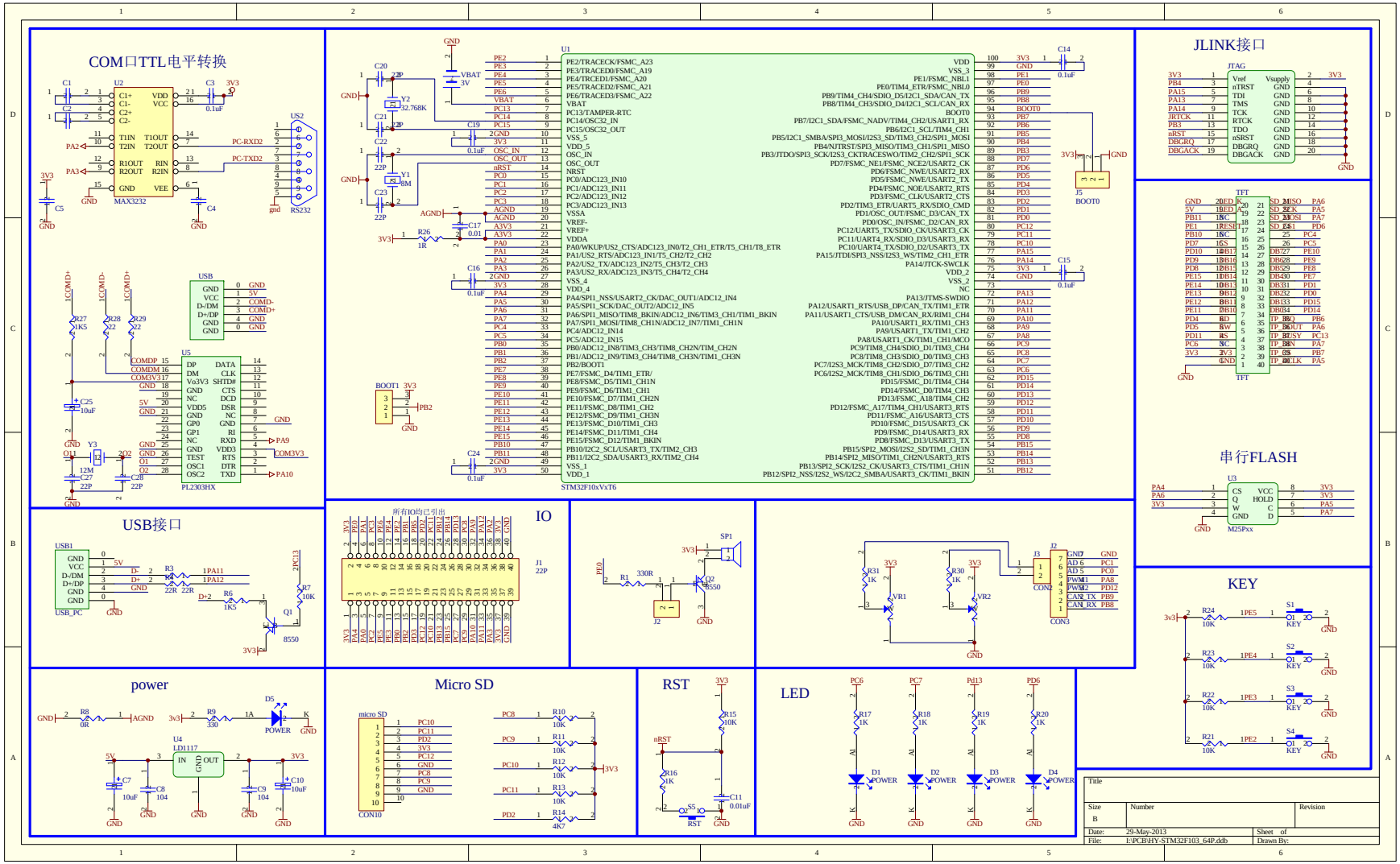
COM口TTL电平转换
U2
MAX3232
US2
RS232
PC-RXD2
PC-TXD2
USB
U5
PL2303HX
U1
STM32F10xVxT6
JLINK接口
JTAG
TFT
串行FLASH
U3
M25Pxx
USB接口
USB1
USB_PC
IO
所有IO均已引出
J1
22P
power
POWER
U4
LD1117
Micro SD
micro SD
CON10
RST
LED
KEY
Title
Size
B
Number
Revision
Date:
29-May-2013
Sheet of
File:
E:\PCB\HY-STM32F103_64P.ddb
Drawn By: