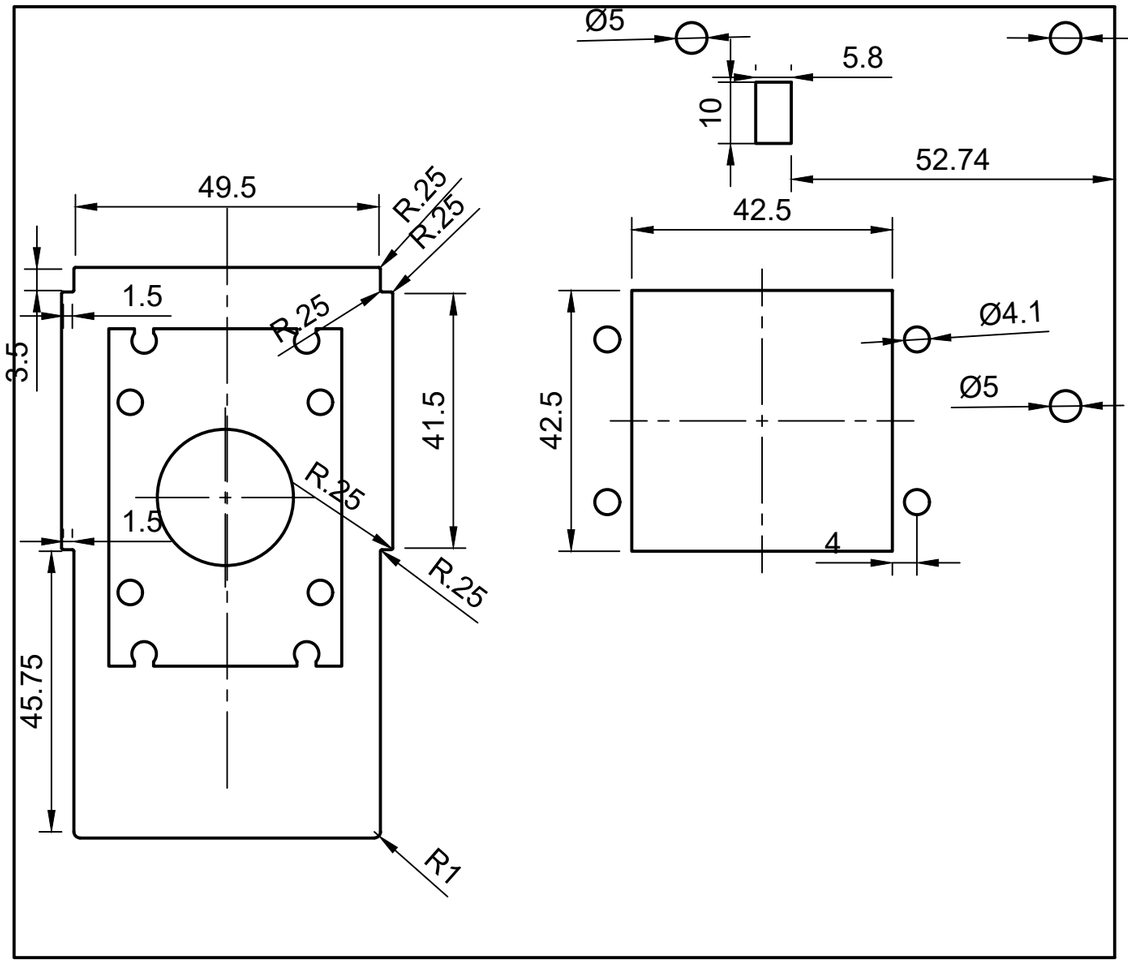

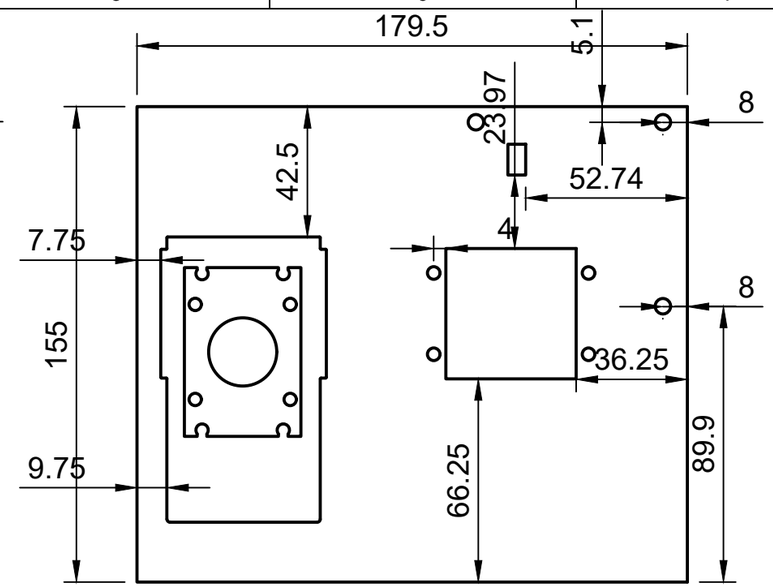

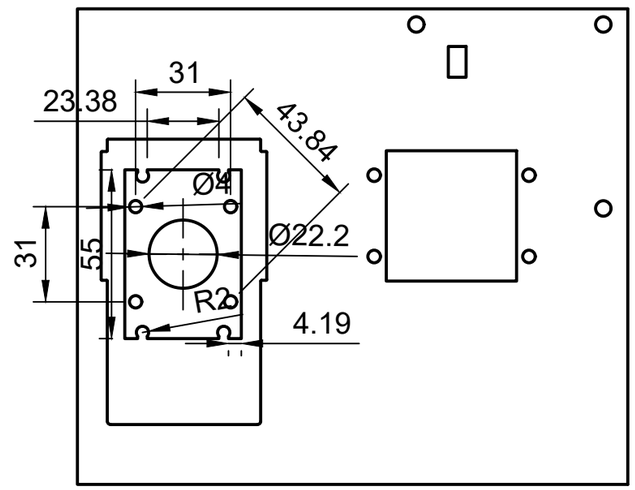

Dept.	Technical reference	Created by Armonius Darkside 10/13/2019	Approved by	
		Document type	Document status	
		Title ensemble façacde	DWG No.	
			Rev. / Date of issue	Sheet 1/1