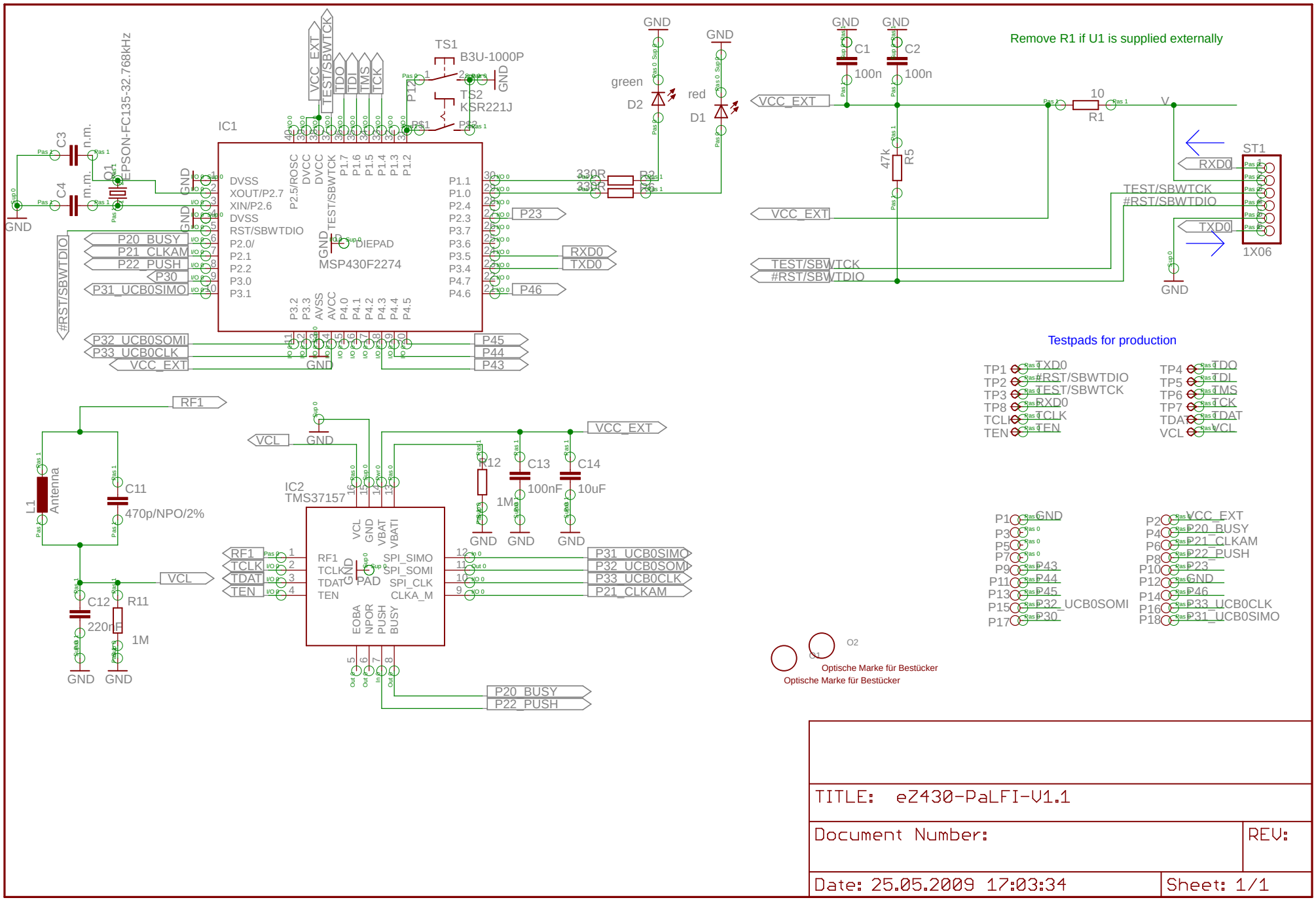
IC1
MSP430F2274
DVSS
XOUT/P2.7
XIN/P2.6
DVSS
RST/SBWTDIO
P2.0/
P2.1
P2.2
P3.0
P3.1
P2.5/ROSC
DVCC
DVCC
TEST/SBWTCK
P1.7
P1.6
P1.5
P1.4
P1.3
P1.2
P1.1
P1.0
P2.4
P2.3
P3.7
P3.6
P3.5
P3.4
P4.7
P4.6
P3.2
P3.3
AVSS
AVCC
P4.0
P4.1
P4.2
P4.3
P4.4
P4.5
DIEPAD
VCC_EXT
TEST/SBWTCK
TDO
TDI
TMS
TCK
TS1
B3U-1000P
TS2
KSR221J
P12
P31
P32
GND
green
D2
red
D1
330R
R3
P23
RXD0
TXD0
P46
P20_BUSY
P21_CLKAM
P22_PUSH
P30
P31_UCB0SIMO
#RST/SBWTDIO
P32_UCB0SOMI
P33_UCB0CLK
VCC_EXT
P45
P44
P43
C3
n.m.
C4
n.m.
Q1
EPSON-FC135-32.768kHz
C1
100n
C2
100n
Remove R1 if U1 is supplied externally
10
R1
V
47k
R5
ST1
1X06
RXD0
TEST/SBWTCK
#RST/SBWTDIO
TXD0
Testpads for production
TP1 TXD0
TP2 #RST/SBWTDIO
TP3 TEST/SBWTCK
TP8 RXD0
TCLK TCLK
TEN TEN
TP4 TDO
TP5 TDI
TP6 TMS
TP7 TCK
TDAT TDAT
VCL VCL
P1 GND
P3
P5
P7
P9 P43
P11 P44
P13 P45
P15 P32_UCB0SOMI
P17 P30
P2 VCC_EXT
P4 P20_BUSY
P6 P21_CLKAM
P8 P22_PUSH
P10 P23
P12 GND
P14 P46
P16 P33_UCB0CLK
P18 P31_UCB0SIMO
RF1
L1
Antenna
C11
470p/NPO/2%
VCL
C12
220nF
R11
1M
IC2
TMS37157
RF1
TCLK
TDAT
TEN
VCL
GND
VBAT
VBATI
SPI_SIMO
SPI_SOMI
SPI_CLK
CLKA_M
EOBA
NPOR
PUSH
BUSY
PAD
R12
1M
C13
100nF
C14
10uF
P31_UCB0SIMO
P32_UCB0SOMI
P33_UCB0CLK
P21_CLKAM
P20_BUSY
P22_PUSH
O1
O2
Optische Marke für Bestücker
Optische Marke für Bestücker
TITLE: eZ430-PaLFI-V1.1
Document Number:
REV:
Date: 25.05.2009 17:03:34
Sheet: 1/1