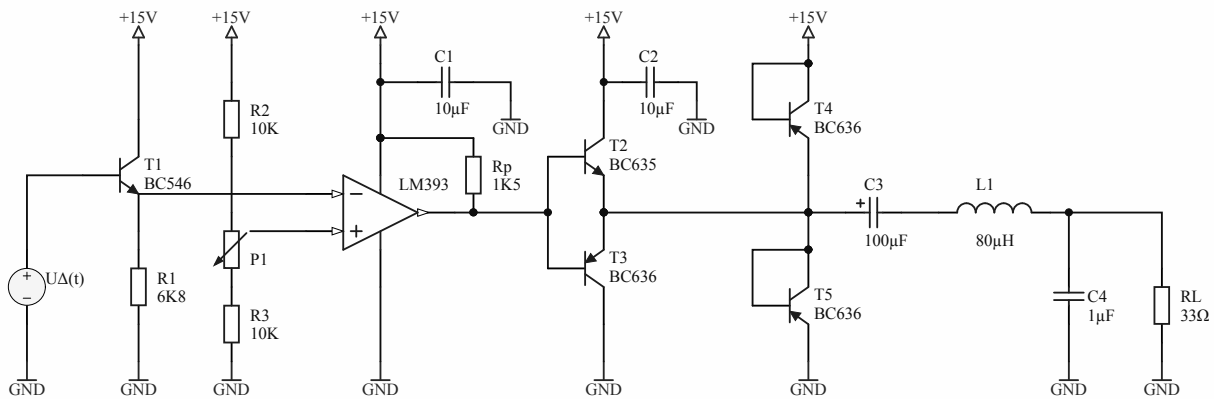

Title		
Size A4	Number	Revision
Date: 17.04.2014		Sheet of
File: \\..\9_PWM-Verstaerker_all_44.SchDoc		Drawn By: