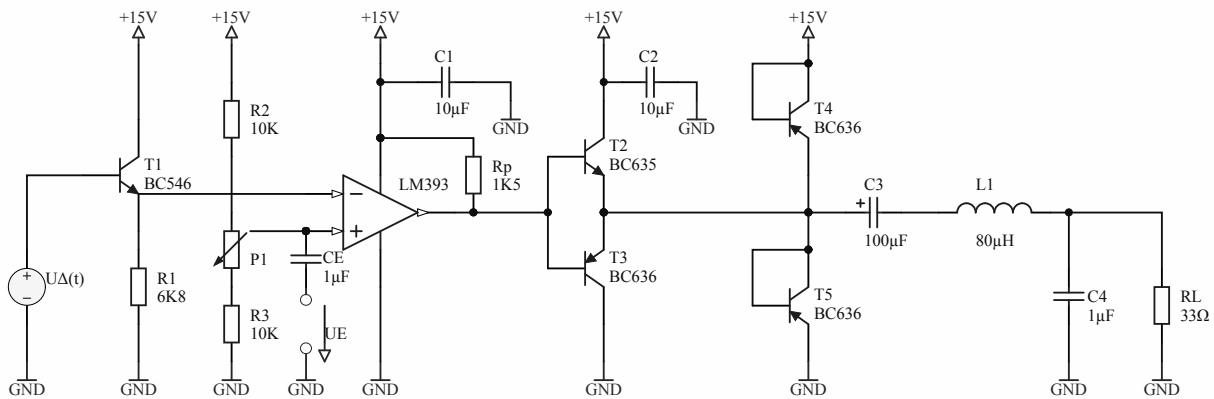


| Title | | |
|---|---|---|
| Size A4 | Number | Revision |
| Date: 18.04.2014 | | Sheet of |
| File: \\..\9_PWM-Verstaerker_all_44.SchDoc | | Drawn By: |