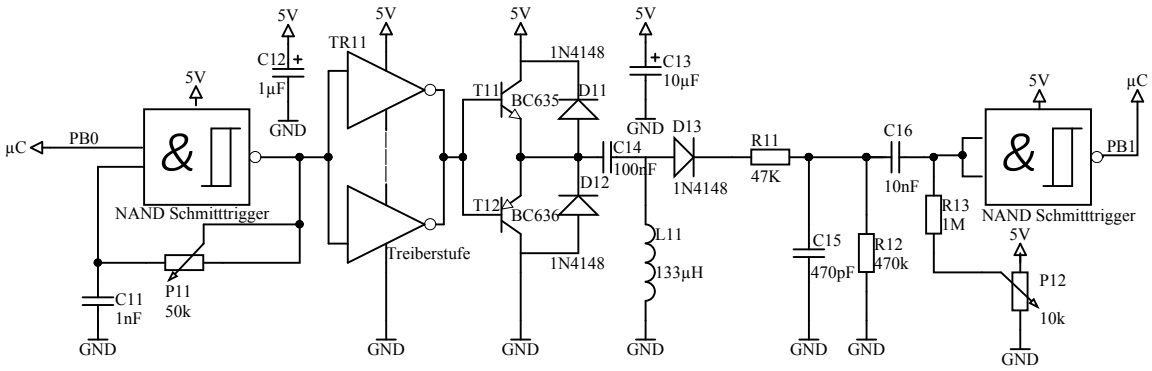

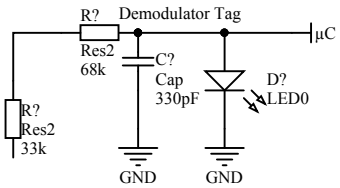

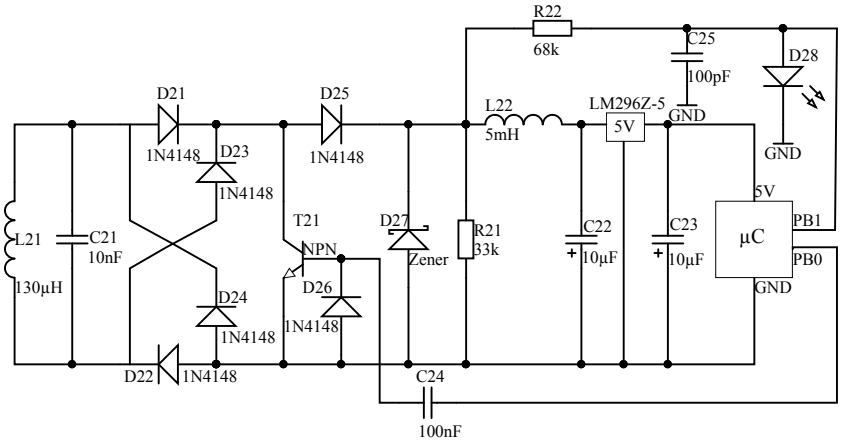

Title		
Size A4	Number	Revision
Date: 08.05.2015		Sheet of
File: G:\HTL\Altium\RF-ID Reader.SchDoc		Drawn By: