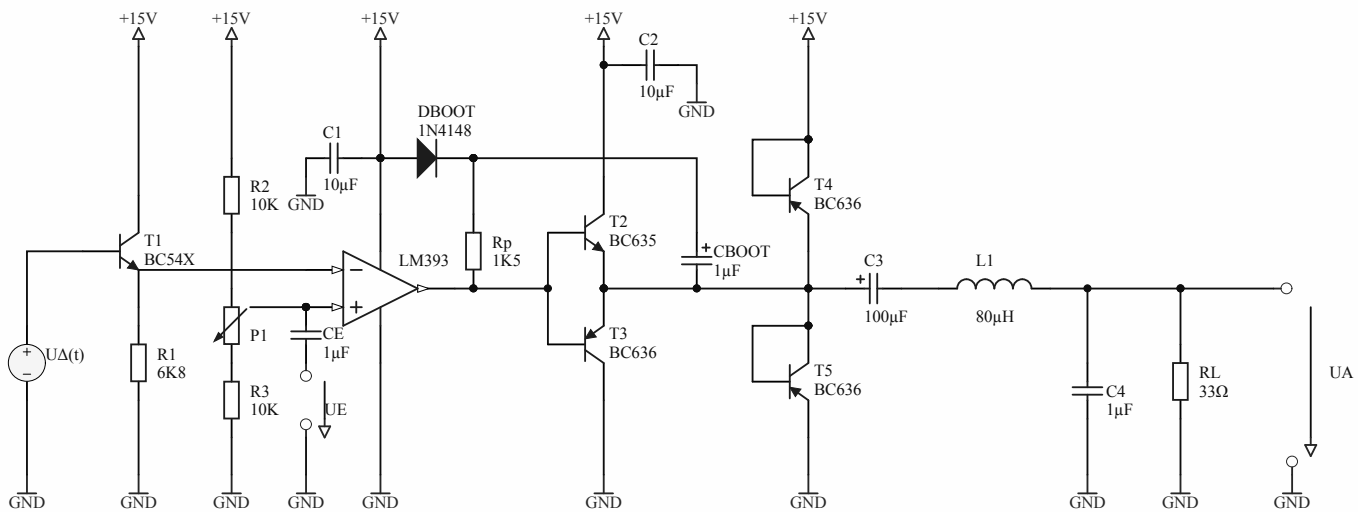

Title		
Size A4	Number	Revision
Date: 19.04.2014		Sheet of
File: \\..\13_PWM-Verstaerker_+_RL.SchDoc		Drawn By: