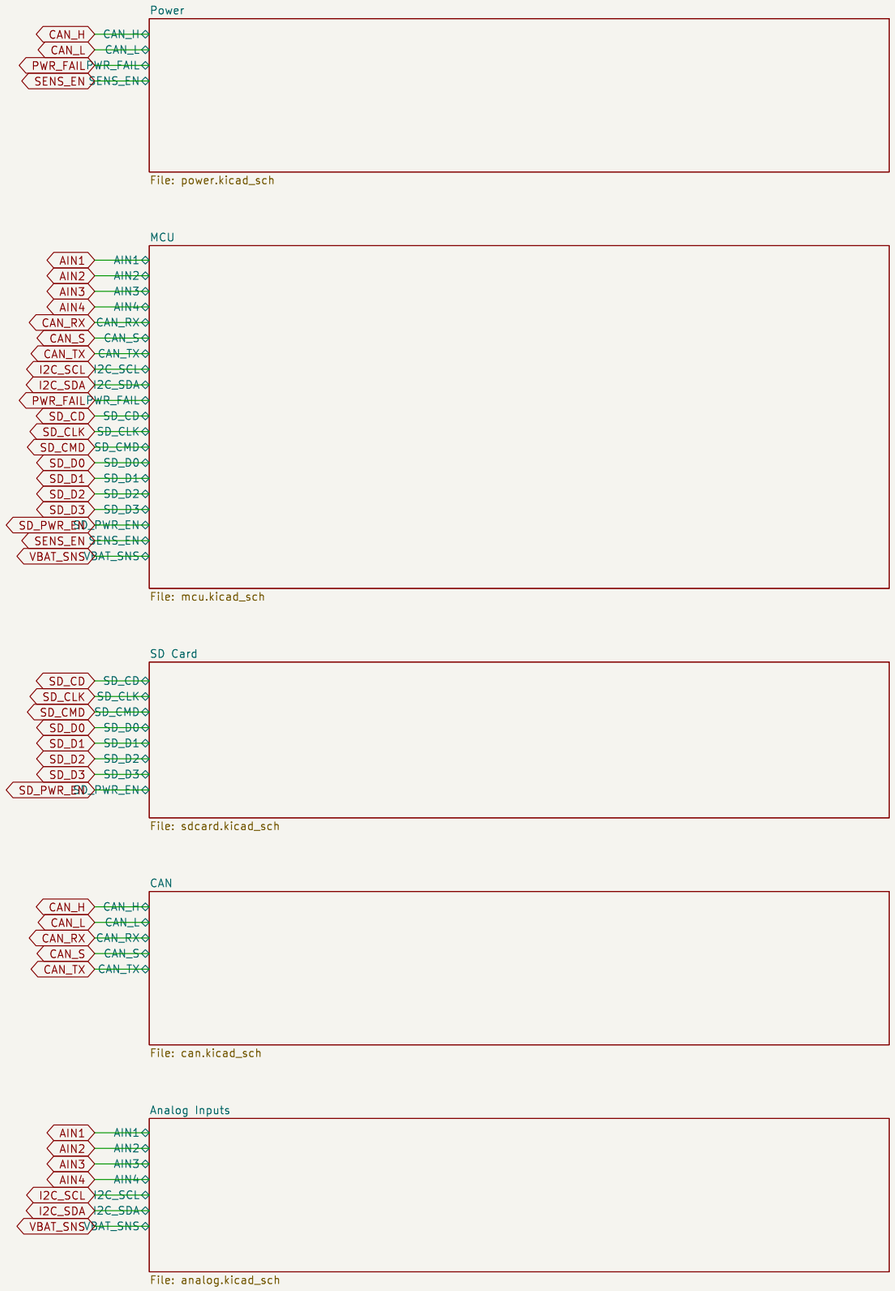

Root sheet -- see the block sheets below

geekopolis

Sheet: /

File: esp32s3-can-sd-logger.kicad_sch

Title: ESP32-S3 CAN + microSD Automotive Logger

Size: A3	Date: 2026-08-11	**Rev: B**
KiCad E.D.A. 9.0.5		Id: 1/6

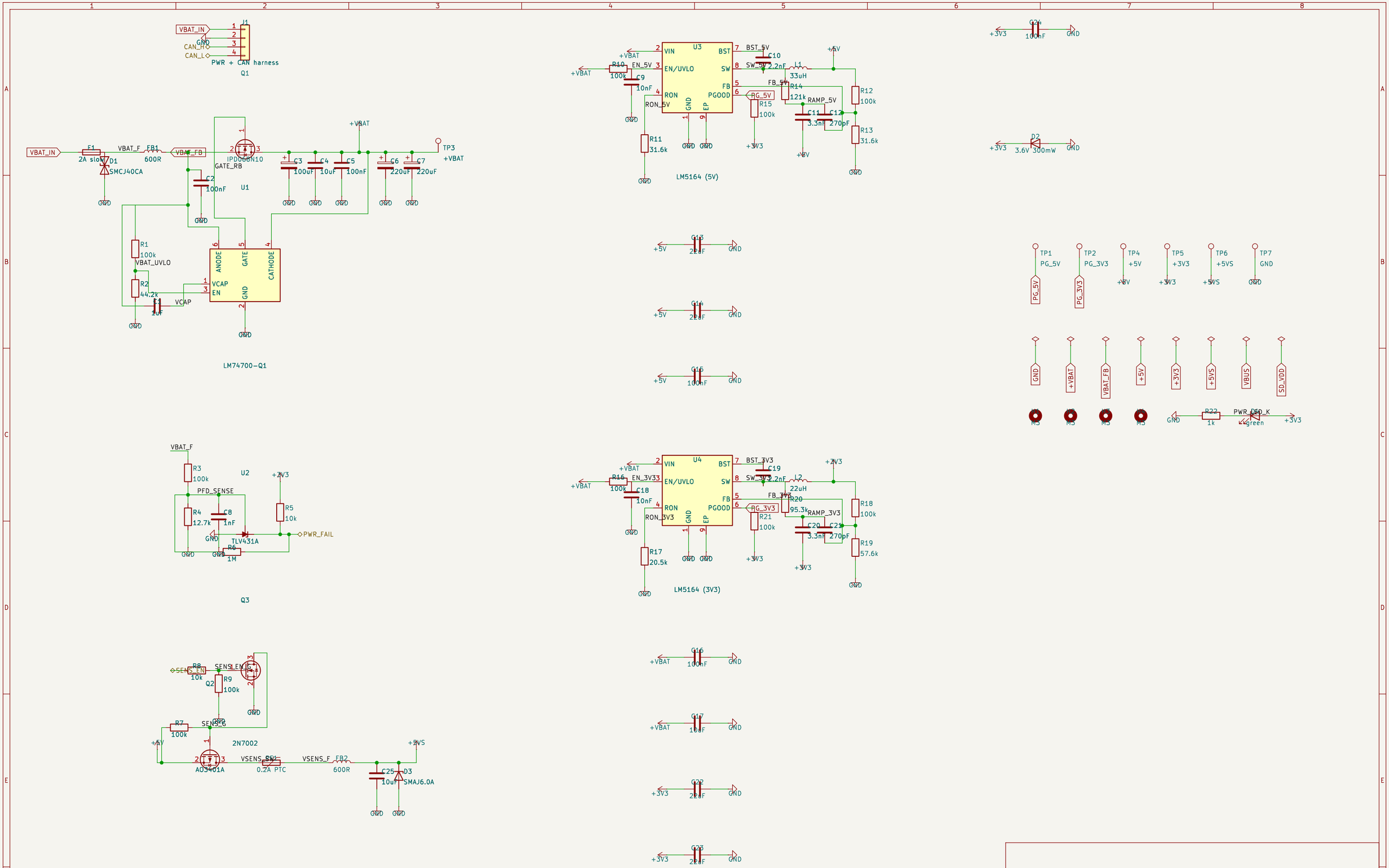

Power -- Reverse-battery protection, transient clamping, +5V / +3V3 / +5V sensor rails

geekopolis

Sheet: /Power/

File: power.kicad_sch

Title: ESP32-S3 CAN + microSD Automotive Logger

Size: A3	Date: 2026-08-11	**Rev: B**
KiCad E.D.A. 9.0.5		Id: 2/6

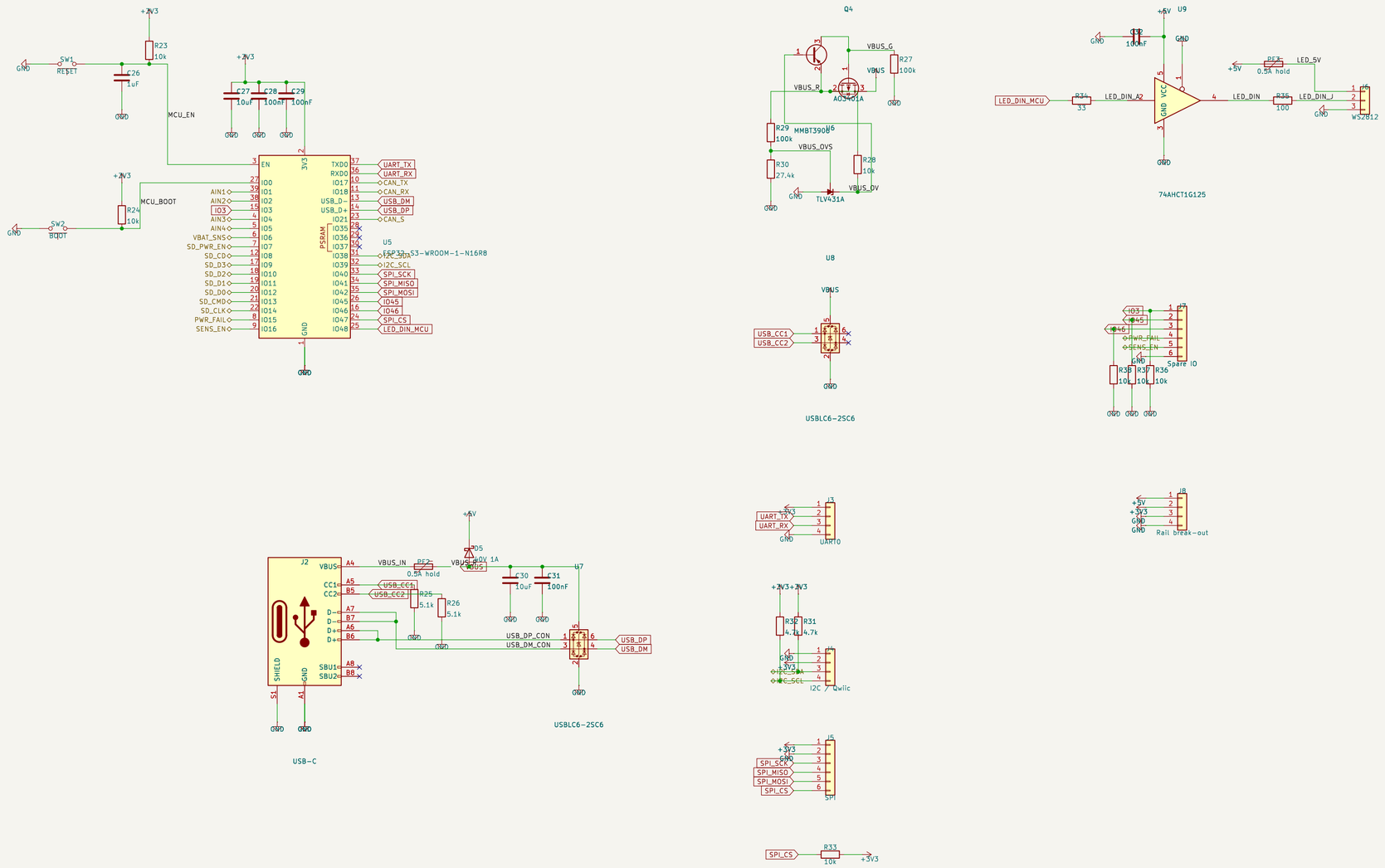

MCU -- ESP32-S3-WROOM-1 module, USB-C, boot/reset, break-out

geekopolis

Sheet: /MCU/

File: mcu.kicad_sch

Title: ESP32-S3 CAN + microSD Automotive Logger

Size: A2	Date: 2026-08-11	**Rev: B**
KiCad E.D.A. 9.0.5		Id: 3/6

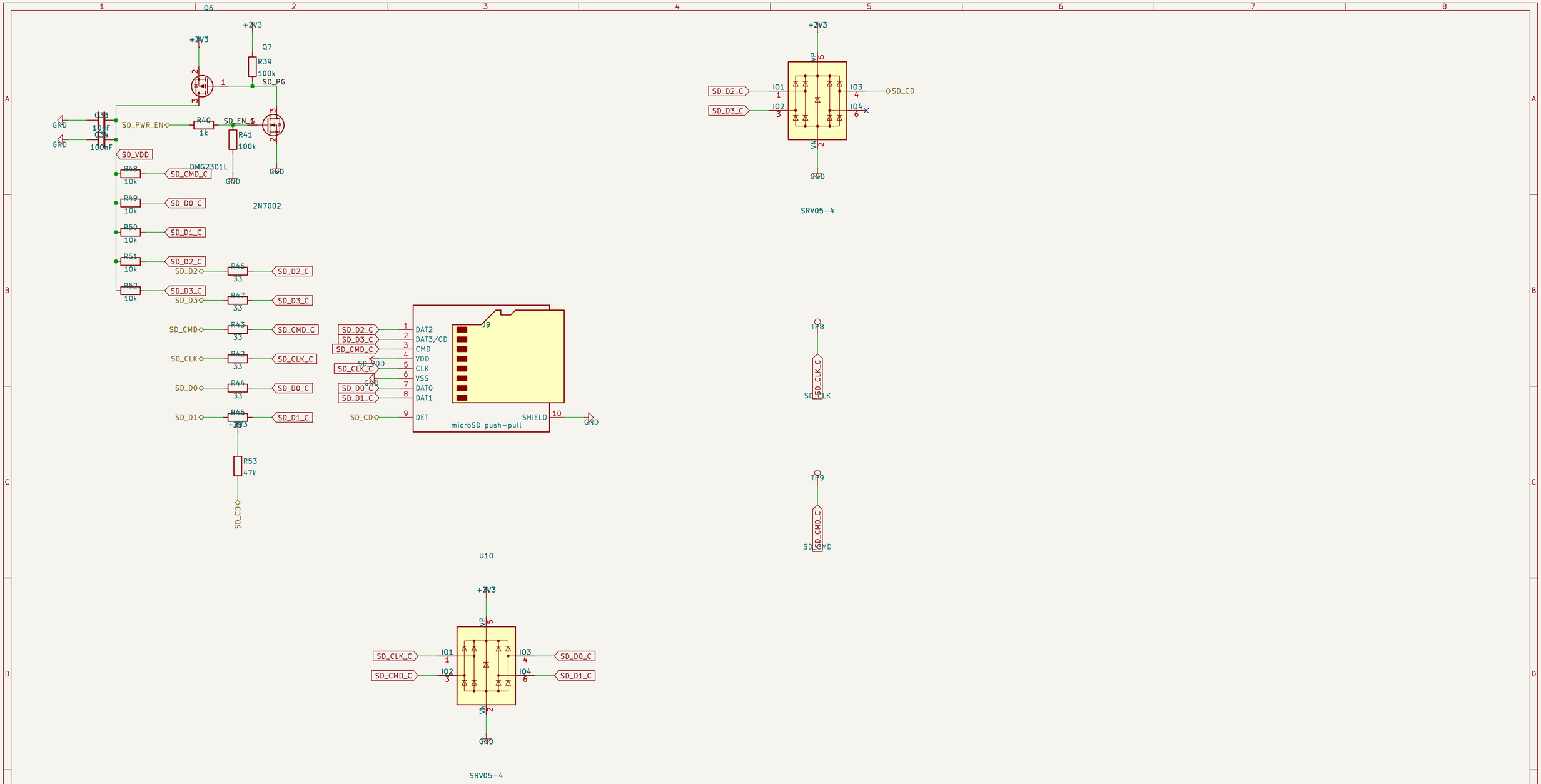

SD Card -- microSD in 4-bit SDMMC mode with a switchable card supply

geekopolis

Sheet: /SD Card/

File: sdcard.kicad_sch

Title: ESP32-S3 CAN + microSD Automotive Logger

Size: A3	Date: 2026-08-11	**Rev: B**
KiCad E.D.A. 9.0.5		Id: 4/6

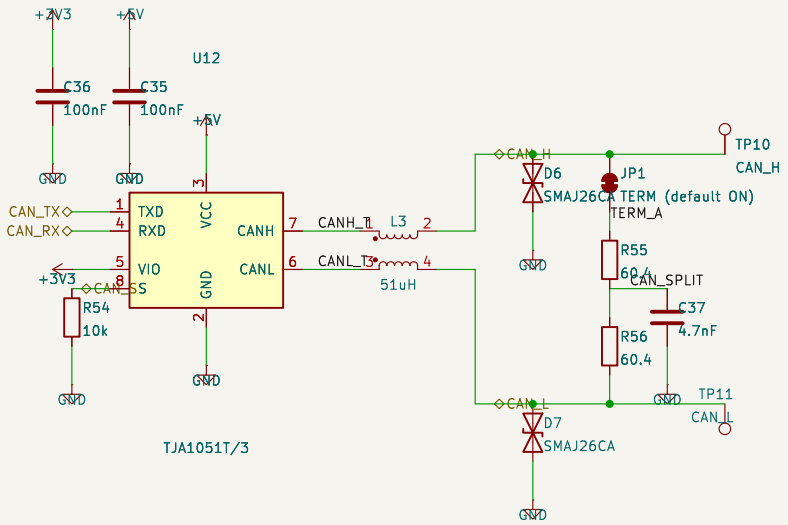

CAN -- Isolated-ground CAN 2.0B node with selectable termination

geekopolis

Sheet: /CAN/

File: can.kicad_sch

Title: ESP32-S3 CAN + microSD Automotive Logger

Size: A5	Date: 2026-08-11	**Rev: B**
KiCad E.D.A. 9.0.5		Id: 5/6

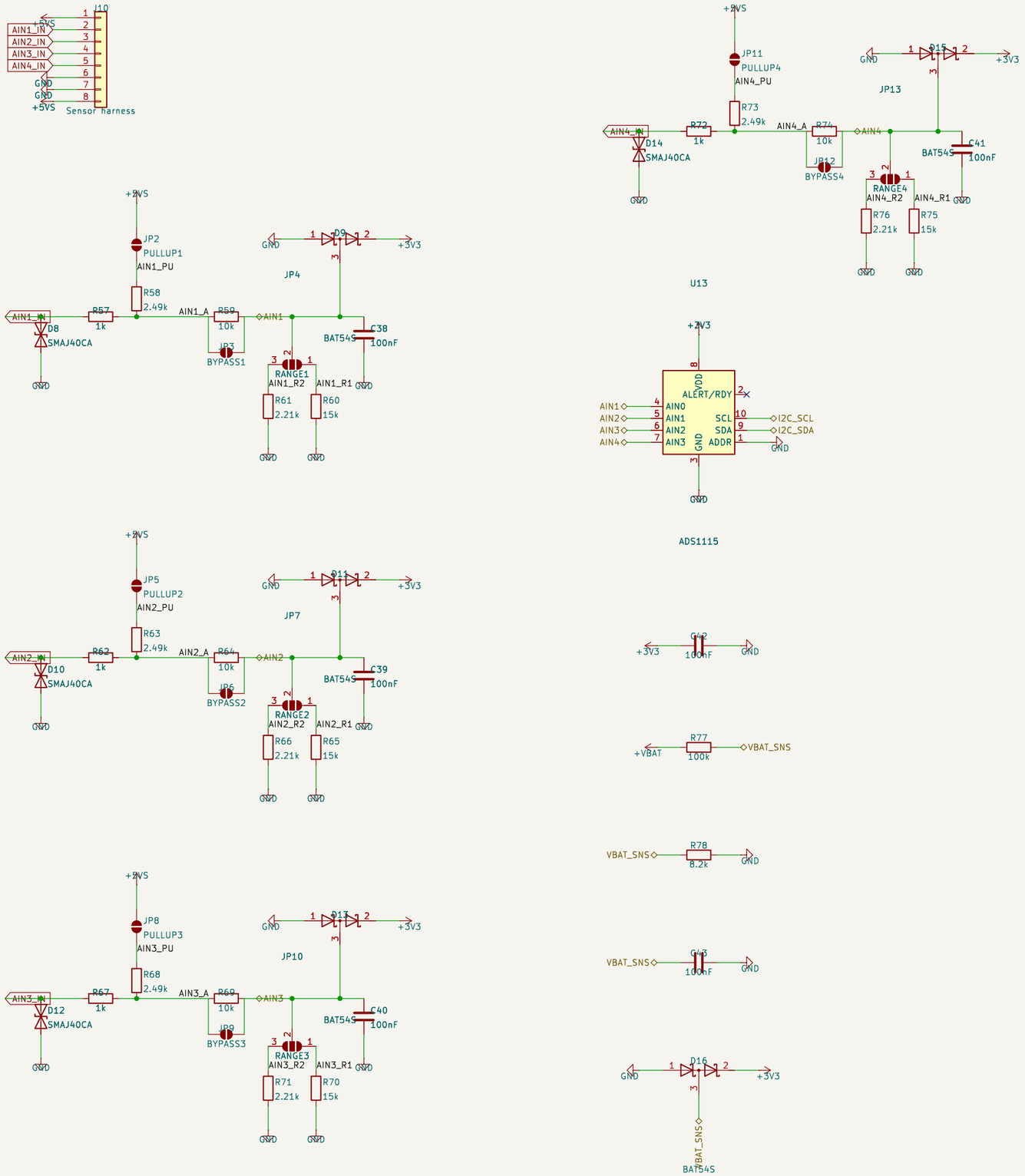

Analog Inputs -- 4 sensor channels with jumper-selected dividers and pull-up bias

geekopolis

Sheet: /Analog Inputs/
File: analog.kicad_sch

Title: ESP32-S3 CAN + microSD Automotive Logger

Size: A3	Date: 2026-08-11	**Rev: B**
KiCad E.D.A. 9.0.5		Id: 6/6