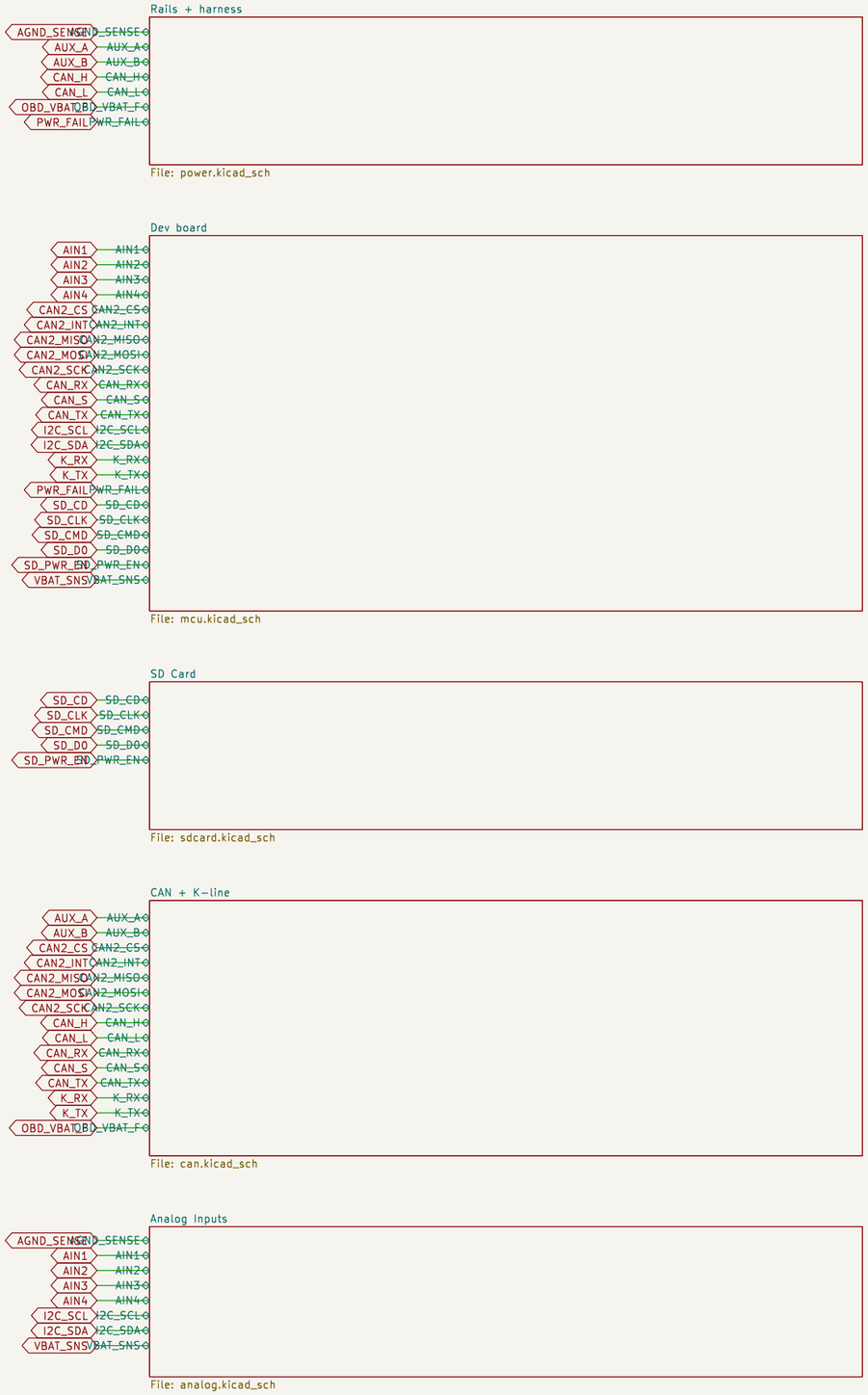

Root sheet -- see the block sheets below

geekopolis

Sheet: /

File: esp32s3-can-sd-logger.kicad_sch

Title: ESP32-S3 CAN + microSD Automotive Logger

Size: A3	Date: 2026-08-11	**Rev: B**
KiCad E.D.A. 9.0.5		Id: 1/6

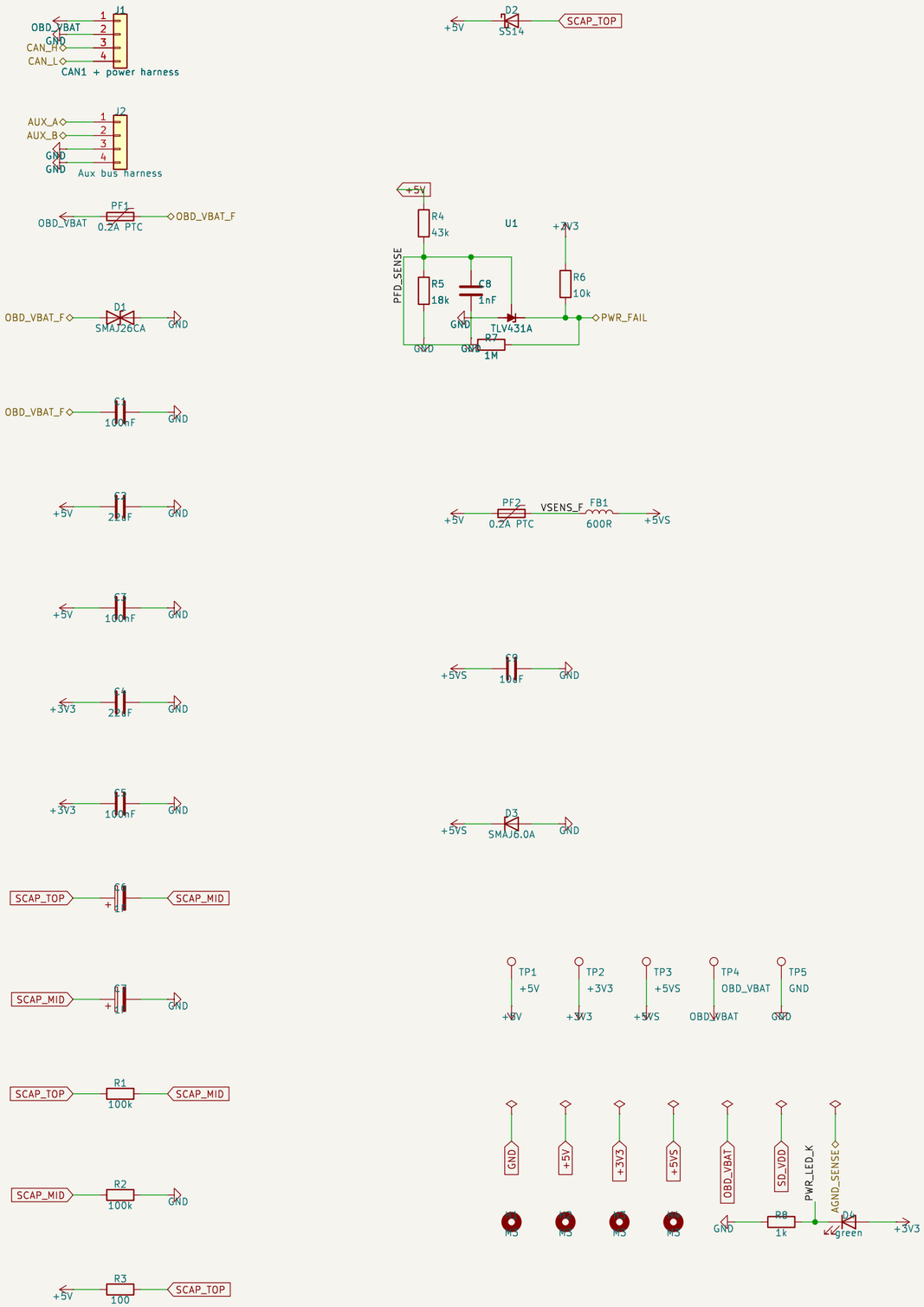

Rails + harness -- USB-derived rails from the dev board, supercap hold-up, OBD-II harness

geekopolis

Sheet: /Rails + harness/
File: power.kicad_sch

Title: ESP32-S3 CAN + microSD Automotive Logger

Size: A3	Date: 2026-08-11	**Rev: B**
KiCad E.D.A. 9.0.5		Id: 2/6

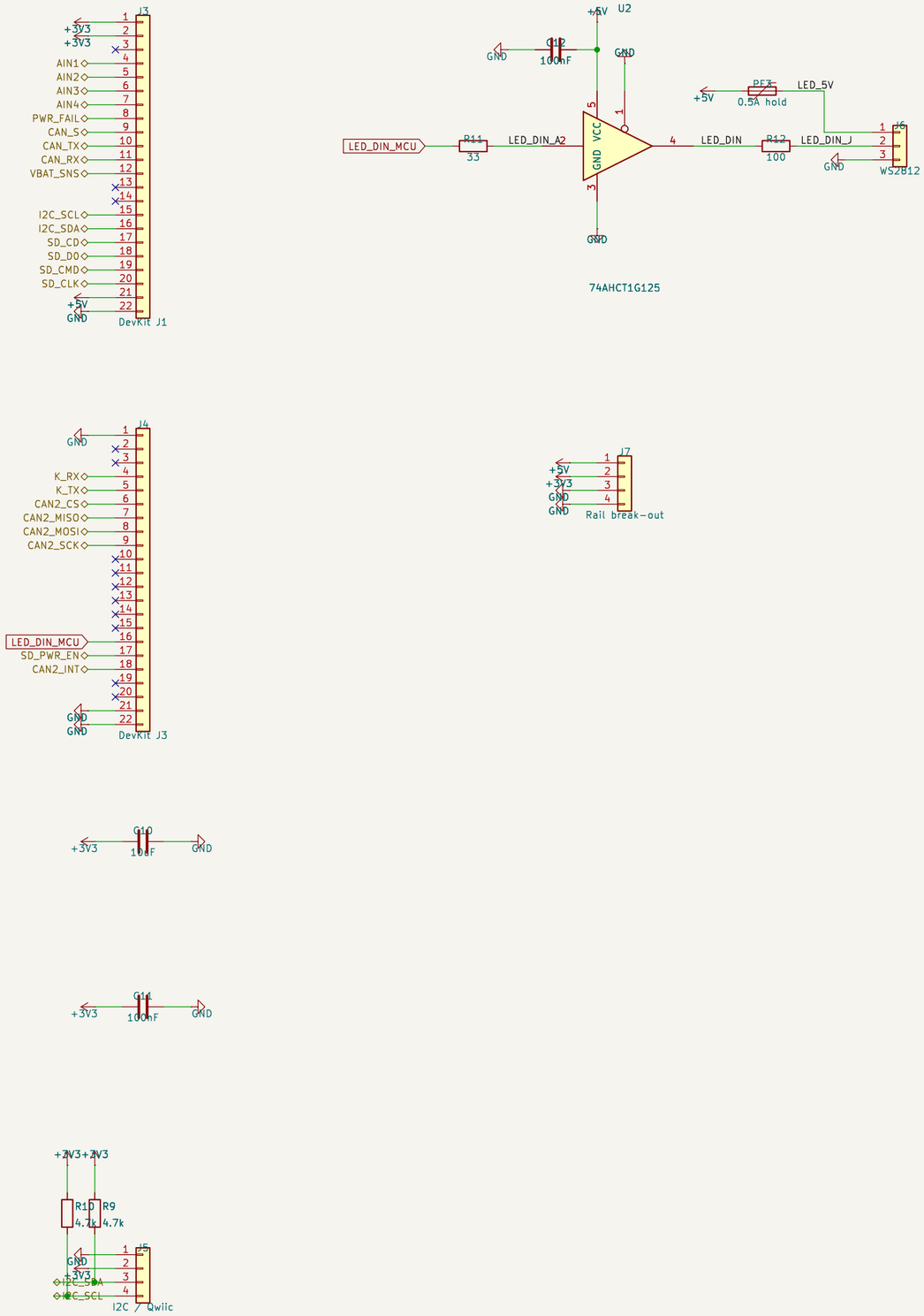

Dev board -- ESP32-S3-DevKitC-1 sockets, I2C/Qwiic, WS2812 buffer, rail break-out

geekopolis

Sheet: /Dev board/

File: mcu.kicad_sch

Title: ESP32-S3 CAN + microSD Automotive Logger

Size: A3	Date: 2026-08-11	**Rev: B**
KiCad E.D.A. 9.0.5		Id: 3/6

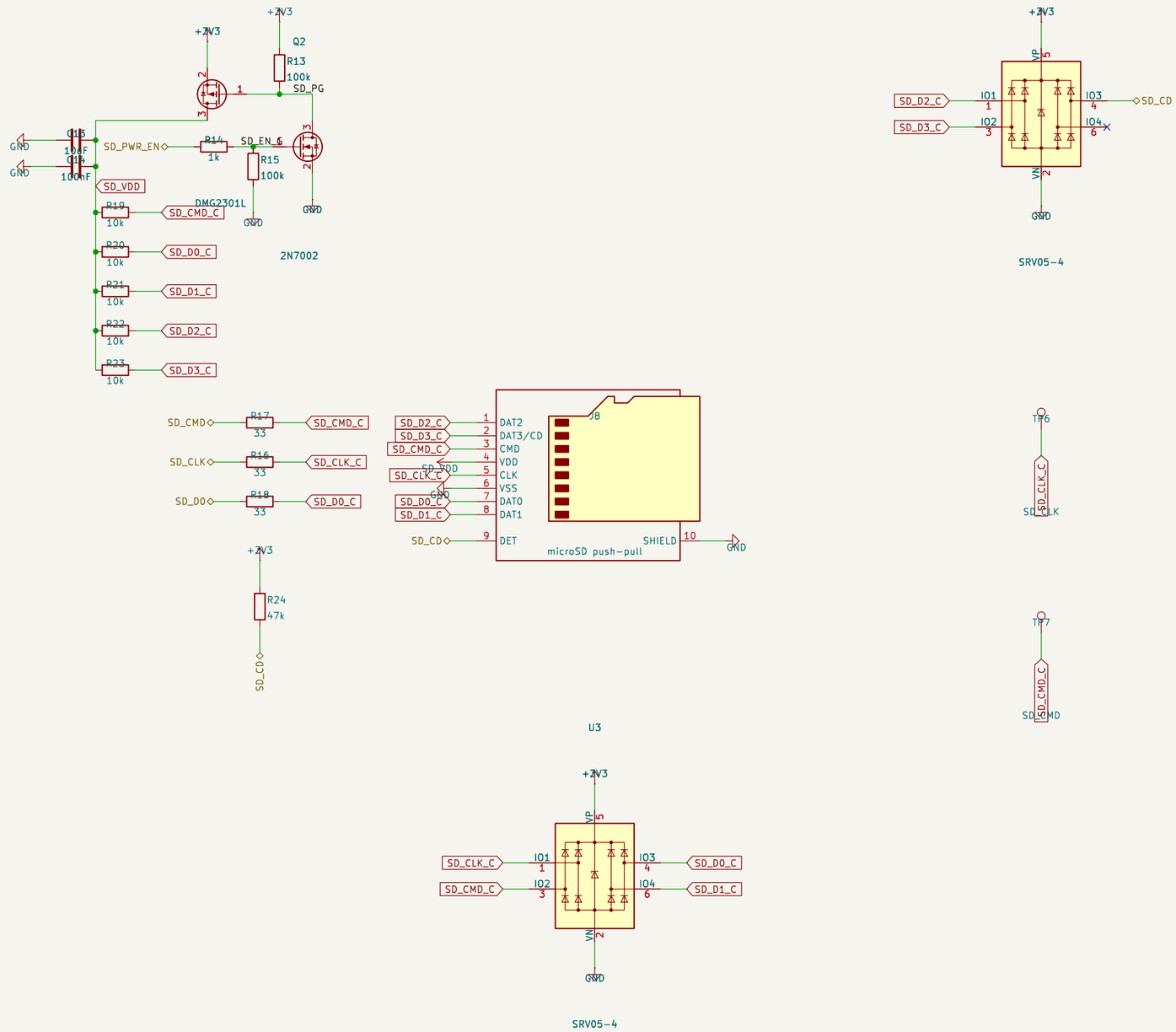

SD Card -- microSD in 4-bit SDMMC mode with a switchable card supply

geekopolis

Sheet: /SD Card/

File: sdcard.kicad_sch

Title: ESP32-S3 CAN + microSD Automotive Logger

Size: A3	Date: 2026-08-11	**Rev: B**
KiCad E.D.A. 9.0.5		Id: 4/6

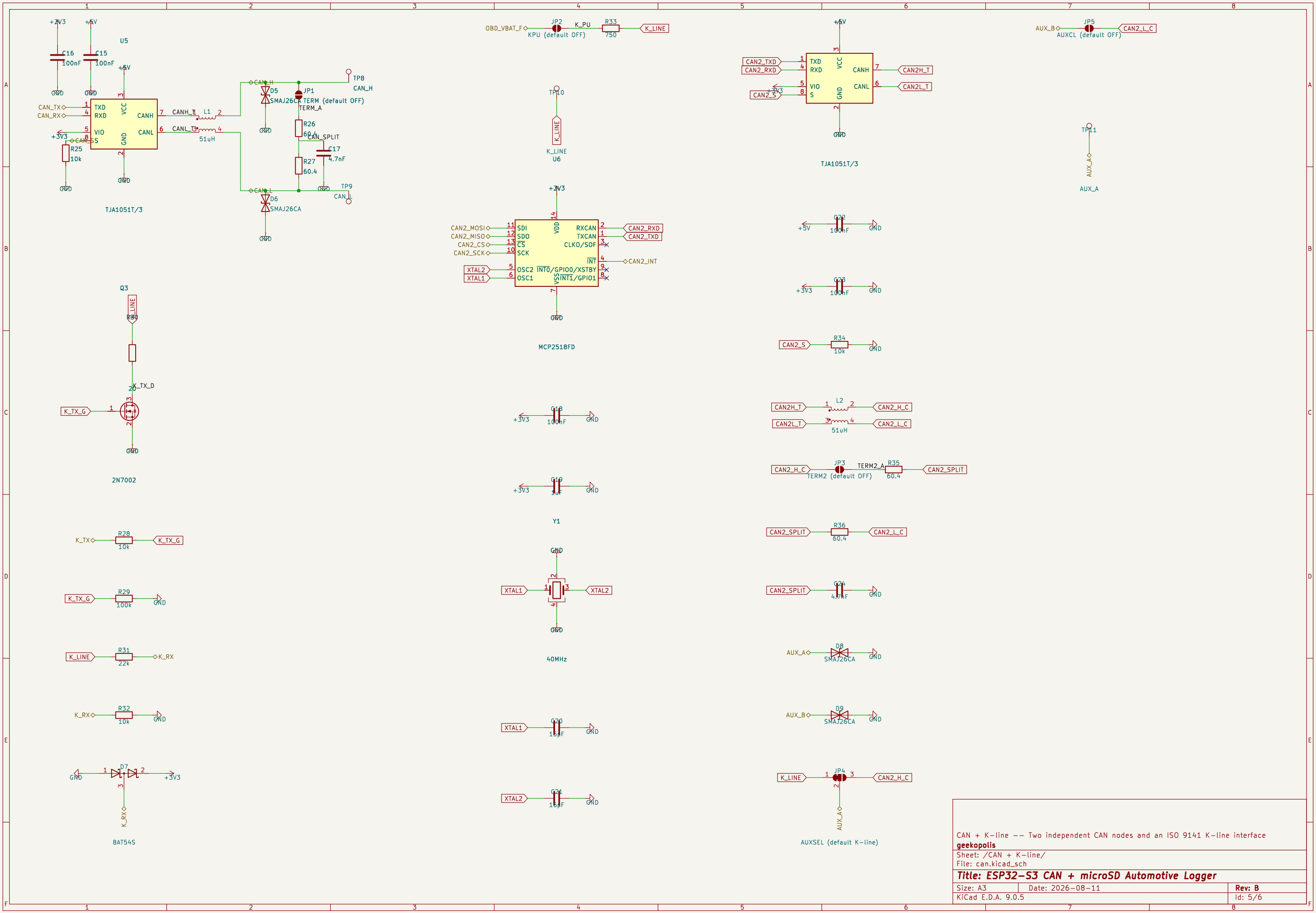
U5
TJA1051T/3
U7
TJA1051T/3
U6
MCP2518FD
Q3
2N7002
Y1
40MHz
BAT54S
JP2
KPU (default OFF)
JP1
TERM (default OFF)
JP5
AUXCL (default OFF)
JP3
TERM2 (default OFF)
JP4
AUXSEL (default K-line)
CAN + K-line -- Two independent CAN nodes and an ISO 9141 K-line interface
geekopolis
Sheet: /CAN + K-line/
File: can.kicad_sch
Title: ESP32-S3 CAN + microSD Automotive Logger
Size: A3
Date: 2026-08-11
Rev: B
KiCad E.D.A. 9.0.5
Id: 5/6

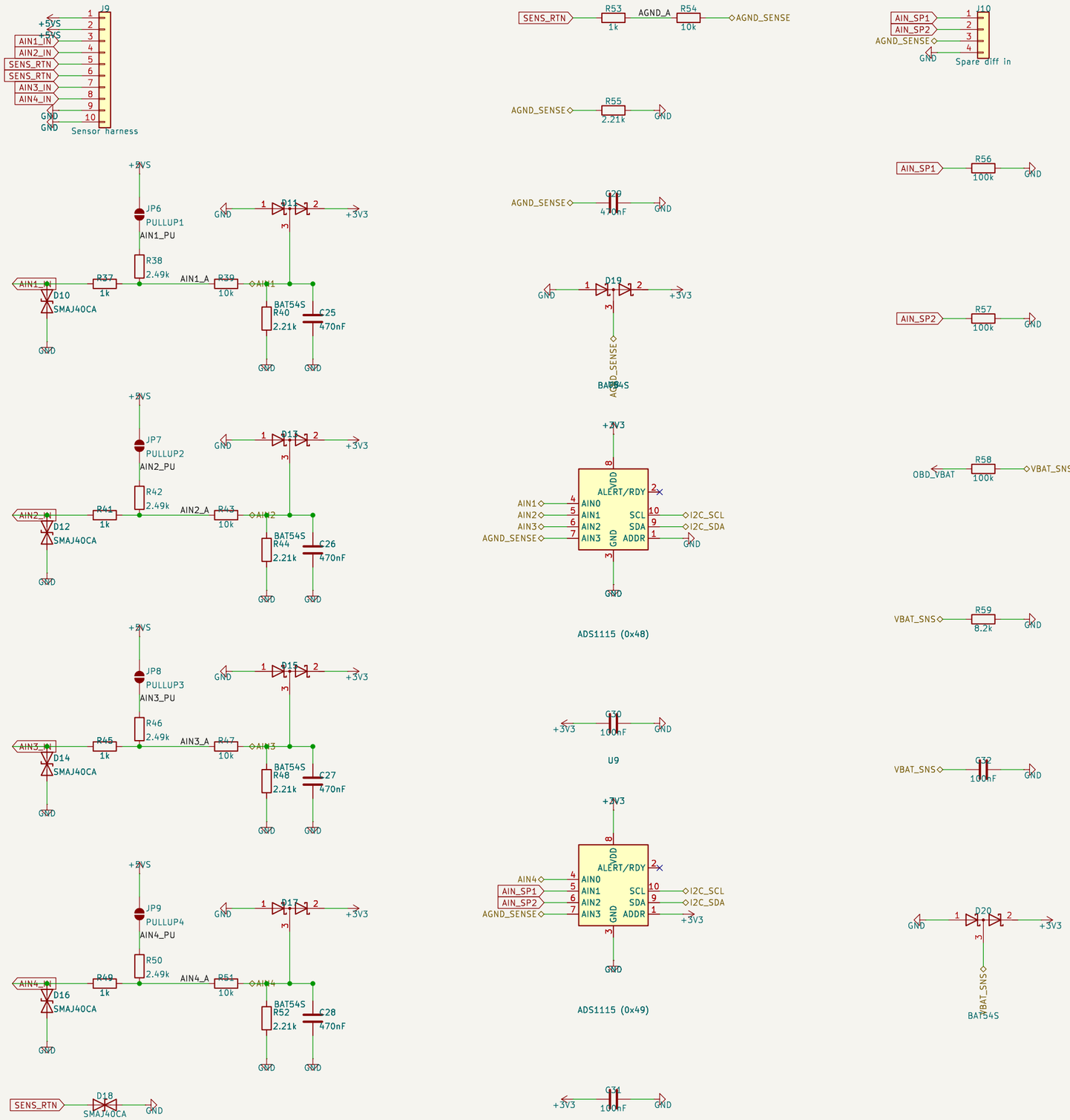

Analog Inputs -- 4 sensor channels, jumper-selected dividers, differential return

geekopolis

Sheet: /Analog Inputs/
File: analog.kicad_sch

Title: ESP32-S3 CAN + microSD Automotive Logger

Size: A3	Date: 2026-08-11	**Rev: B**
KiCad E.D.A. 9.0.5		Id: 6/6