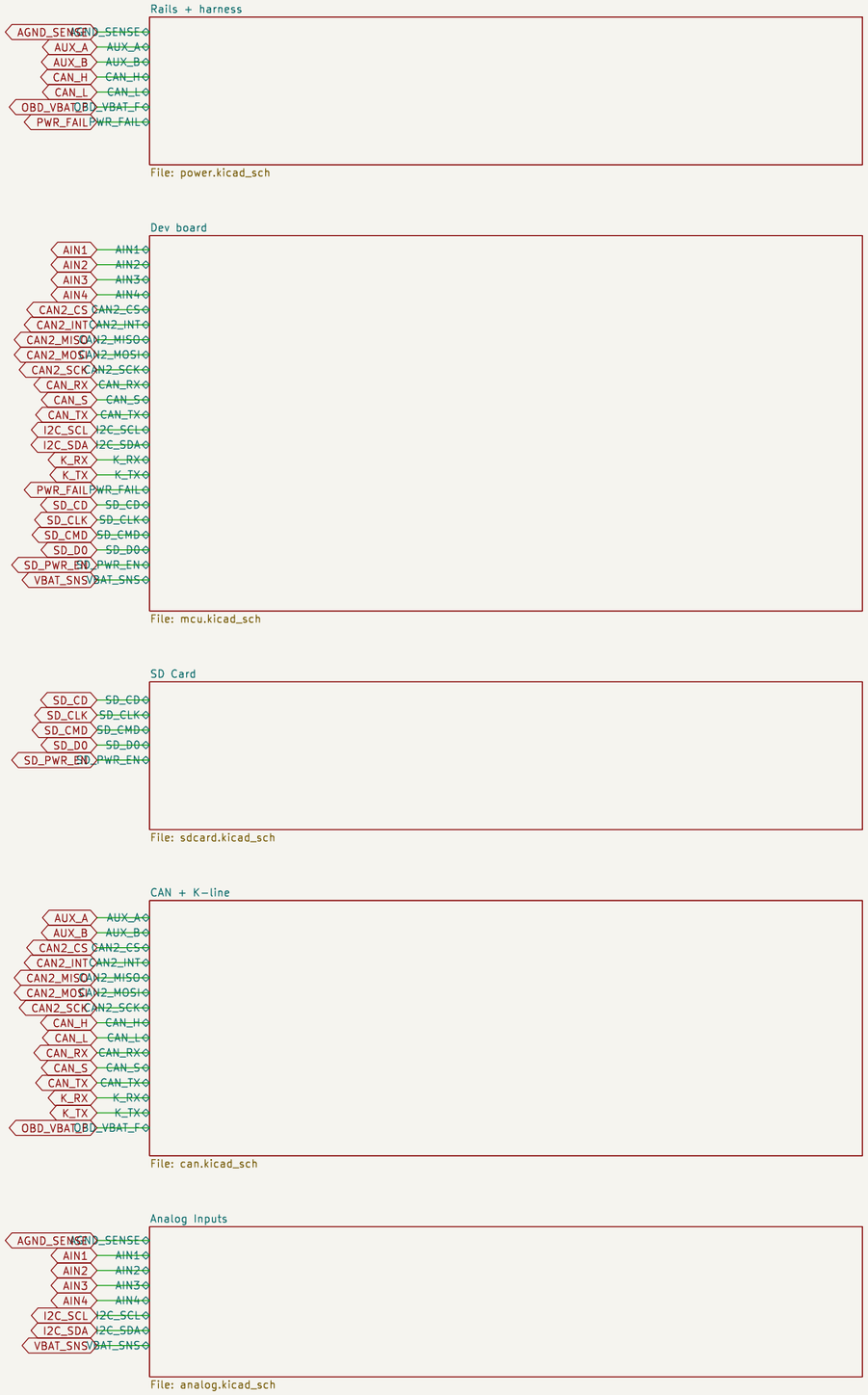

Root sheet -- see the block sheets below

geekopolis

Sheet: /

File: esp32s3-can-sd-logger.kicad_sch

Title: ESP32-S3 CAN + microSD Automotive Logger

Size: A3	Date: 2026-08-11	**Rev: B**
KiCad E.D.A. 9.0.5		Id: 1/6

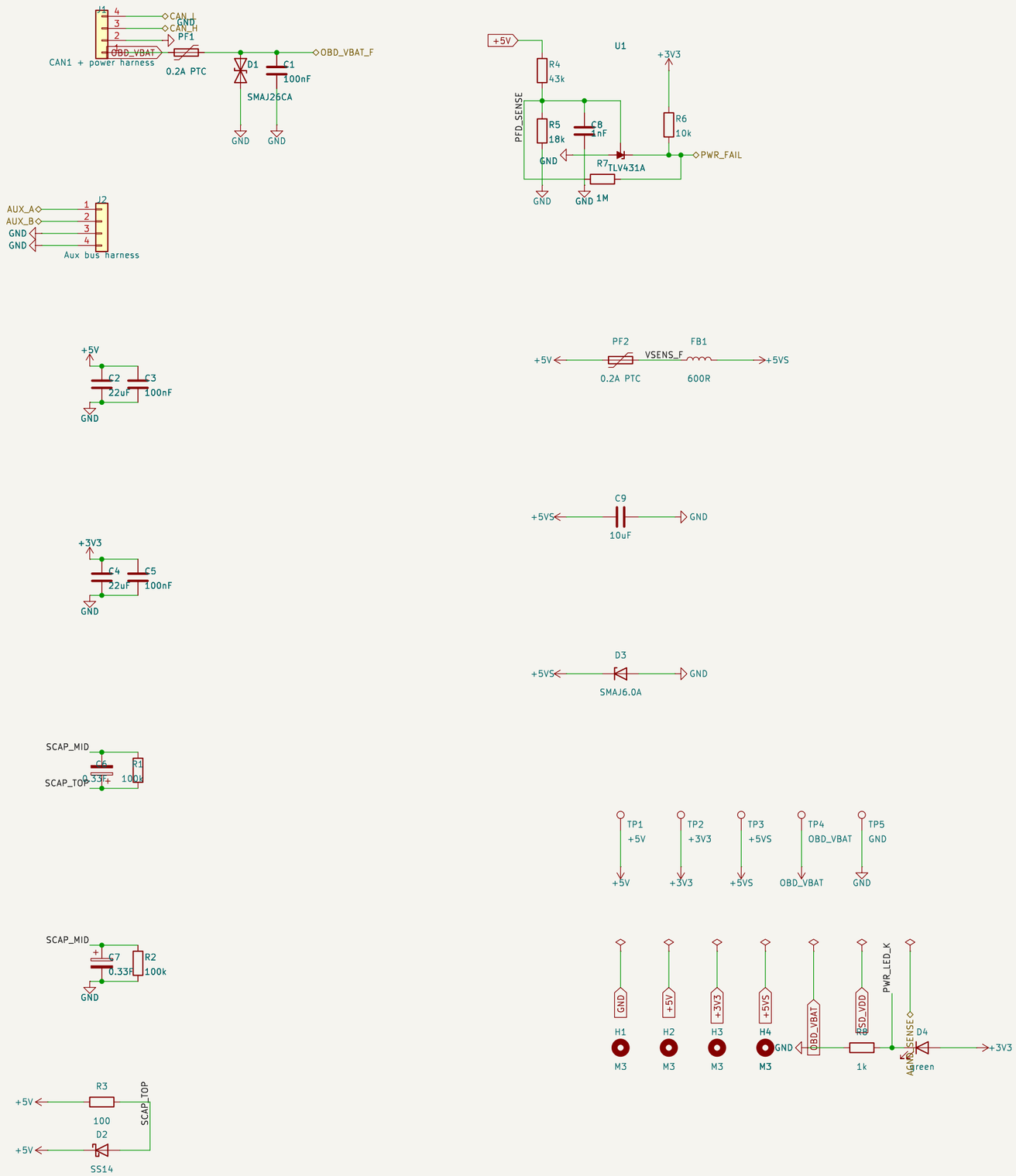

Rails + harness -- USB-derived rails from the dev board, supercap hold-up, OBD-II harness

geekopolis

Sheet: /Rails + harness/

File: power.kicad_sch

Title: ESP32-S3 CAN + microSD Automotive Logger

Size: A3	Date: 2026-08-11	**Rev: B**
KiCad E.D.A. 9.0.5		Id: 2/6

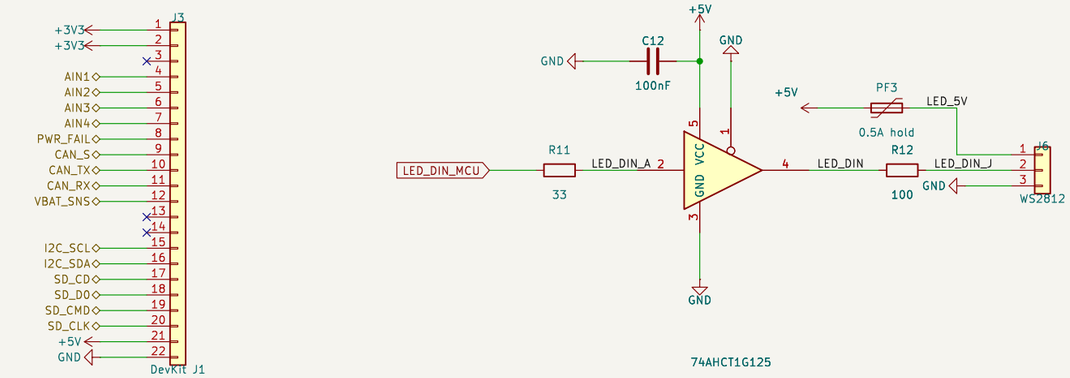

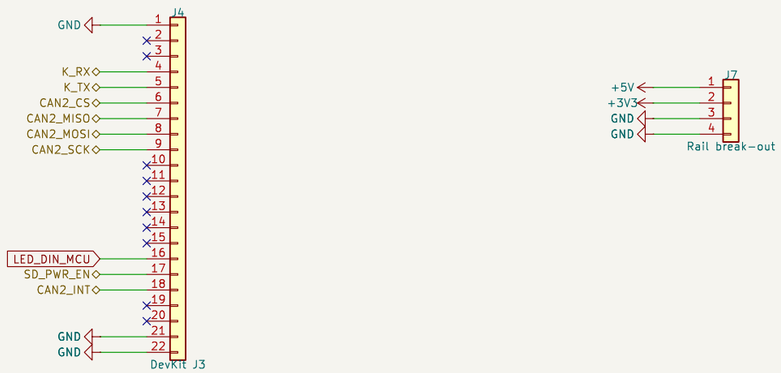

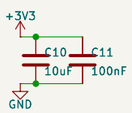

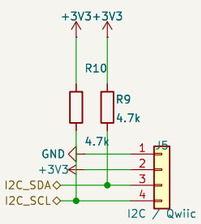

Dev board -- ESP32-S3-DevKitC-1 sockets, I2C/Qwiic, WS2812 buffer, rail break-out

geekopolis

Sheet: /Dev board/
File: mcu.kicad_sch

Title: ESP32-S3 CAN + microSD Automotive Logger

Size: A3	Date: 2026-08-11	**Rev: B**
KiCad E.D.A. 9.0.5		Id: 3/6

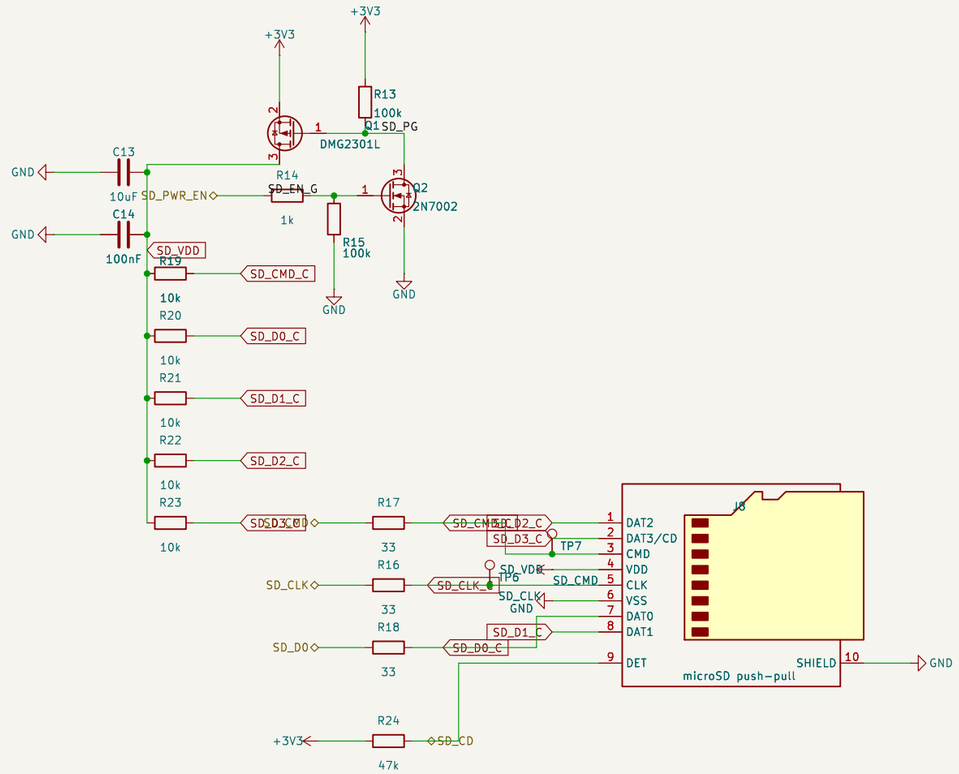

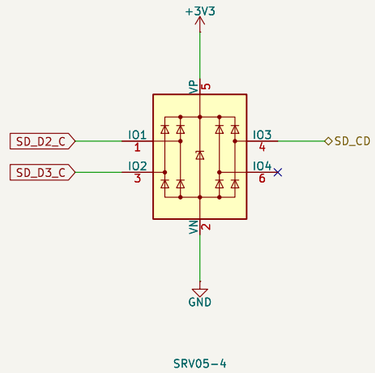

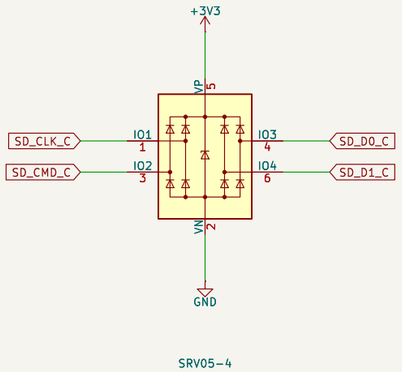

SD Card -- microSD in 1-bit SDMMC mode with a switchable card supply

geekopolis

Sheet: /SD Card/

File: sdcard.kicad_sch

Title: ESP32-S3 CAN + microSD Automotive Logger

Size: A3	Date: 2026-08-11	**Rev: B**
KiCad E.D.A. 9.0.5		Id: 4/6

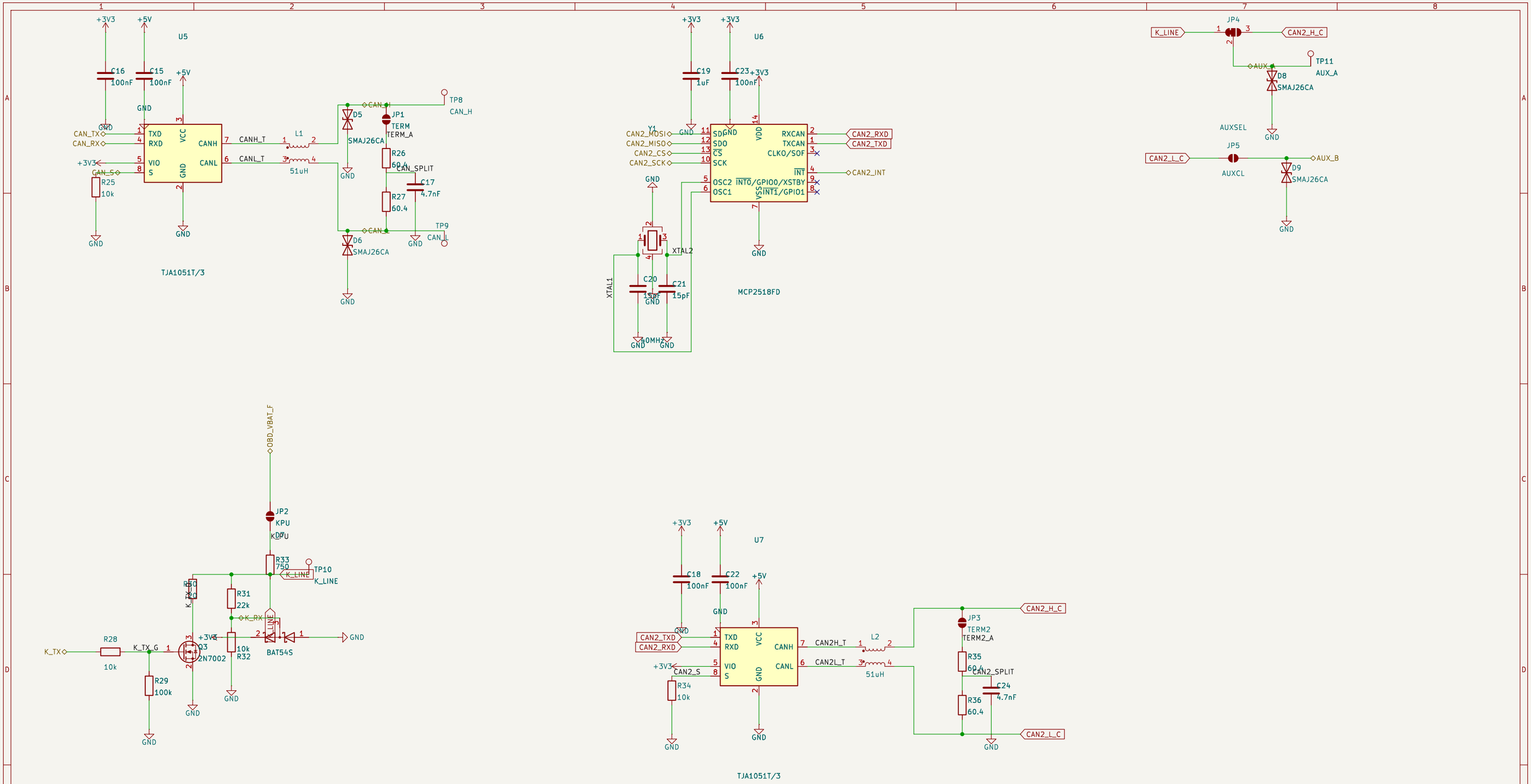

CAN + K-line -- Two independent CAN nodes and an ISO 9141 K-line interface

geekopolis

Sheet: /CAN + K-line/

File: can.kicad_sch

Title: ESP32-S3 CAN + microSD Automotive Logger

Size: A3	Date: 2026-08-11	**Rev: B**
KiCad E.D.A. 9.0.5		Id: 5/6

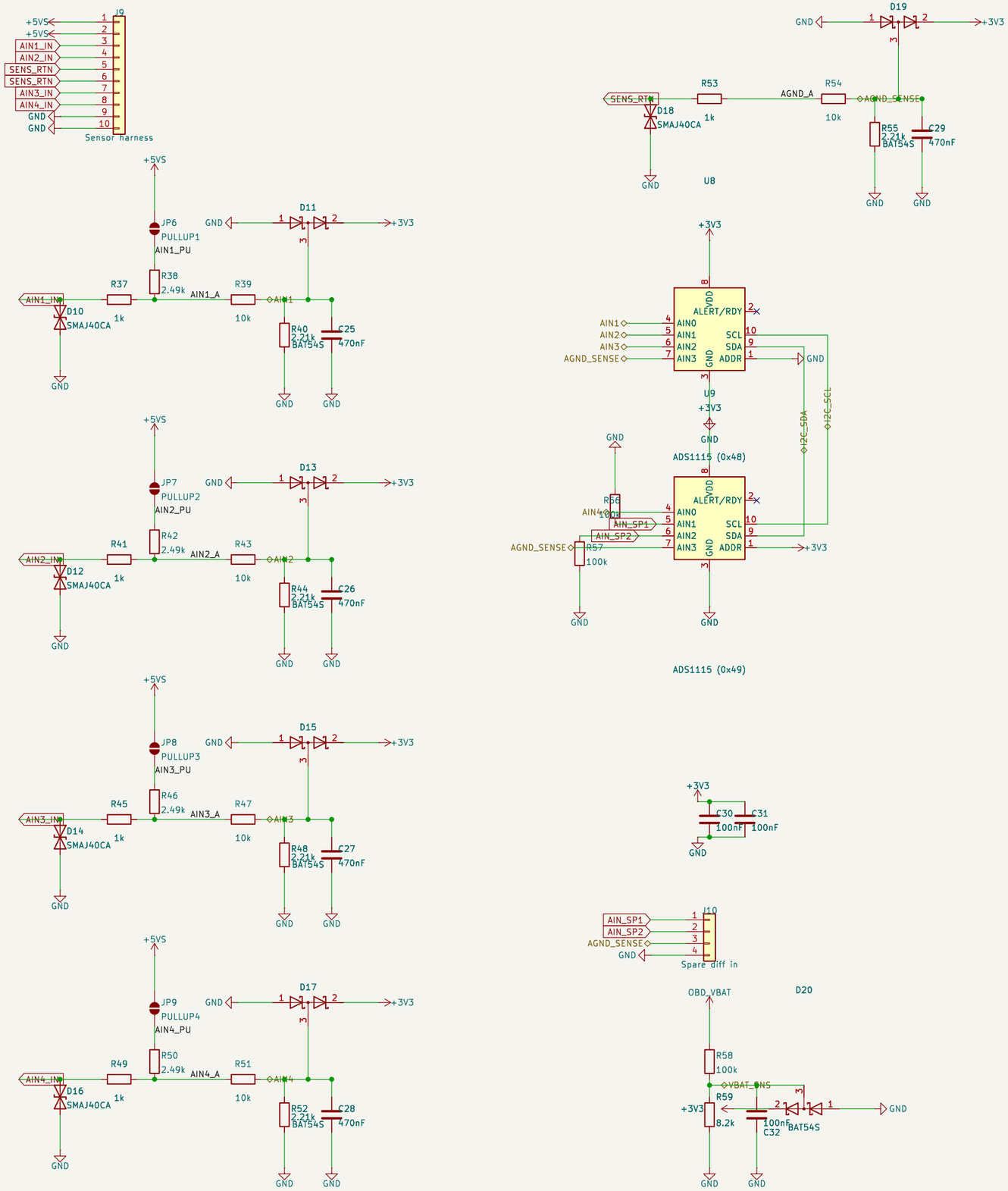

Analog Inputs -- 4 sensor channels, jumper-selected dividers, differential return

geekopolis

Sheet: /Analog Inputs/
File: analog.kicad_sch

Title: ESP32-S3 CAN + microSD Automotive Logger

Size: A3	Date: 2026-08-11	**Rev: B**
KiCad E.D.A. 9.0.5		Id: 6/6