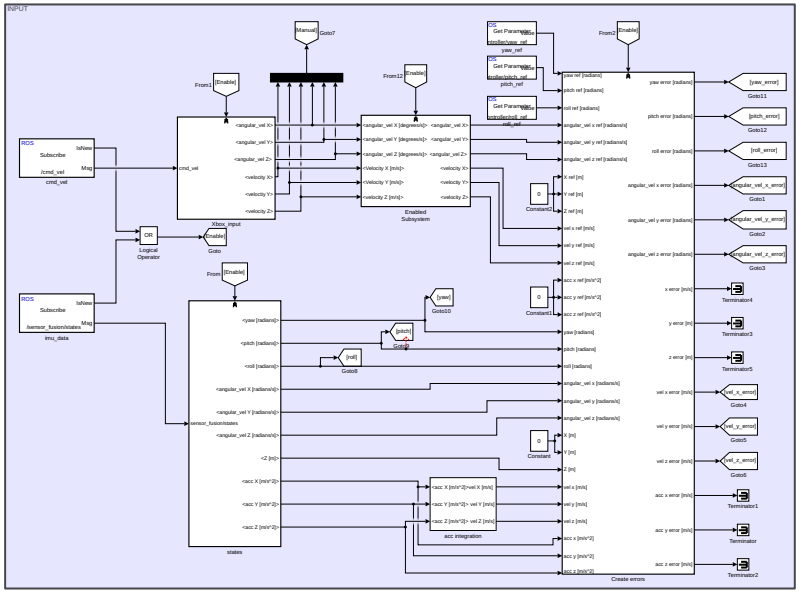

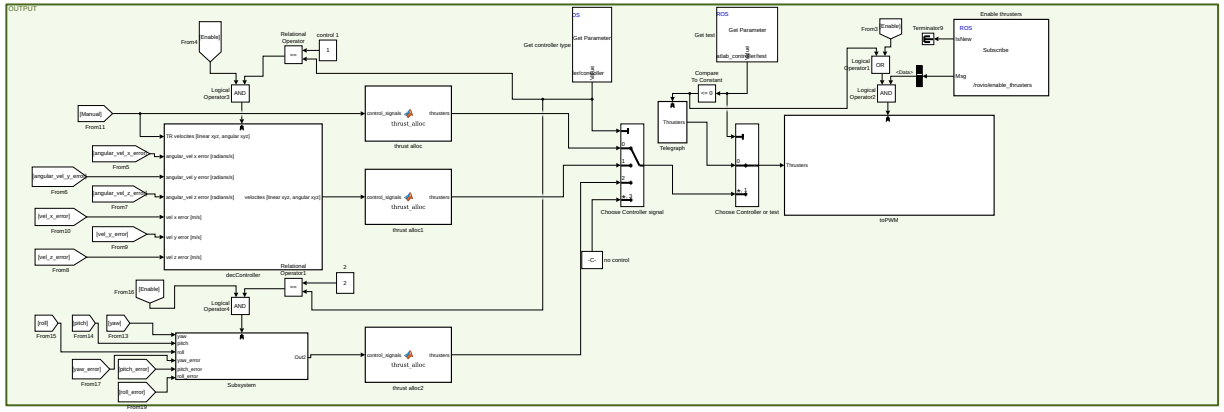

Run ROSINIT to set up a local ROS Master

Click here to run rosinit

MATLAB Function blocks and mavros require their output buses to be created explicitly. Use robotics.ros.createSimulinkBus to do this.

Click here to run robotics.ros.createSimulinkBus