FOR OFFICIAL USE

N5

National
Qualifications
SPECIMEN ONLY

Mark

S844/75/02

Applications of Mathematics
Paper 2

Date — Not applicable

Duration — 1 hour 40 minutes

S844750 2

Fill in these boxes and read what is printed below.

Full name of centre

Town

Forename(s)

Surname

Number of seat

Date of birth

Day | Month | Year

Scottish candidate number

Total marks — 55

Attempt ALL questions.

You may use a calculator.

To earn full marks you must show your working in your answers.

State the units for your answer where appropriate.

Write your answers clearly in the spaces provided in this booklet. Additional space for answers is provided at the end of this booklet. If you use this space you must clearly identify the question number you are attempting.

Use **blue** or **black** ink.

Before leaving the examination room you must give this booklet to the Invigilator; if you do not, you may lose all the marks for this paper.

SQA ©

S844750201

FORMULAE LIST

Circumference of a circle $C = \pi d$

Area of a circle $A = \pi r^2$

Theorem of Pythagoras

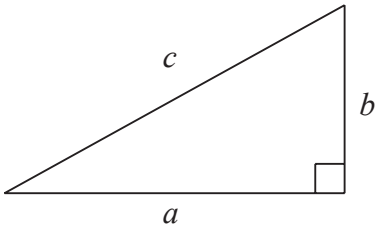

$a^2 + b^2 = c^2$

Volume of a cylinder $V = \pi r^2 h$

Volume of a prism $V = Ah$

Volume of a cone $V = \frac{1}{3}\pi r^2 h$

Volume of a sphere $V = \frac{4}{3}\pi r^3$

Standard deviation $s = \sqrt{\dfrac{\Sigma(x-\bar{x})^2}{n-1}}$

or $s = \sqrt{\dfrac{\Sigma x^2 - \dfrac{(\Sigma x)^2}{n}}{n-1}}$, where n is the sample size.

Gradient

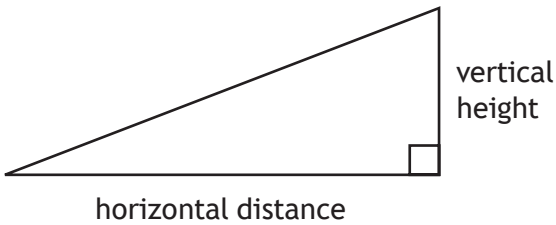

$$\text{gradient} = \frac{\text{vertical height}}{\text{horizontal distance}}$$

MARKS | DO NOT WRITE IN THIS MARGIN

Total marks — 55

Attempt ALL questions

1. Jack bought a car 3 years ago costing £1400.

The car has decreased in value by 13% each year.

(a) Calculate the current value of the car.

Give your answer to **2 significant figures**. **4**

Jack sells his car for £950.

(b) Calculate his loss as a percentage of the **original price**. **2**

MARKS | DO NOT WRITE IN THIS MARGIN

2. The prices of lambs sold in September was recorded.

A sample of the prices, in pounds, is shown.

72 75 73 68 65 70

(a) For these prices, calculate:

(i) the mean **1**

(ii) the standard deviation. **3**

The price of lambs sold in August was also recorded.

The mean price was £70.20 and the standard deviation was £3.85.

(b) Make two valid comparisons about the prices of lambs in August and September. **2**

MARKS | DO NOT WRITE IN THIS MARGIN

3. A hotel is having a swimming pool built.

It is in the shape of a rectangle and two quarter circles as shown below.

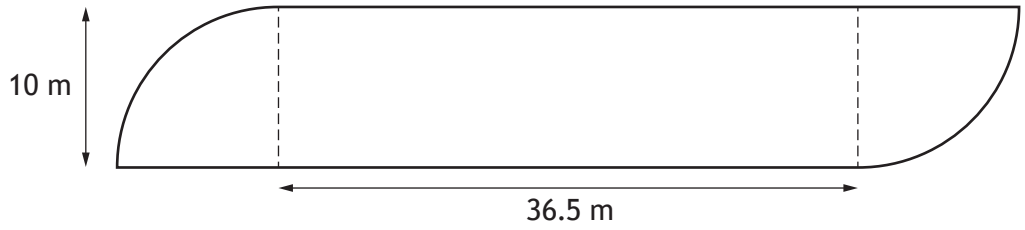

The swimming pool will have a safety rail fitted around its edge.

- There will be two 125 cm wide gaps to allow access to the pool.
- Safety rail is sold in 3 metre lengths.
- Each 3 metre length costs £11.49.

Calculate the minimum cost of the safety rail for the pool. **5**

MARKS | DO NOT WRITE IN THIS MARGIN

4. Finlay travelled from his home to work, 23.1 miles away.

His average speed was 42 mph.

He left his home at 08:12.

(a) Calculate what time he arrived at work. **2**

At the weekend, Finlay plans to make a **return** journey from his home to the shopping centre.

He knows:

- the shopping centre is 26 miles away
- his car will cover an average of 67 km per gallon of fuel
- the car has 5 litres of fuel in its tank.

(b) Determine if Finlay will have enough fuel to complete this **return** journey.

1 mile = 1.609 km

1 gallon = 4.545 litres **4**

MARKS | DO NOT WRITE IN THIS MARGIN

5. David is writing his new book.

He spends:

- 210 hours on research
- 96 hours in meetings
- 234 hours writing the book.

(a) Construct a pie chart to illustrate this information. **3**

(An additional diagram, if required, can be found on *page 18*.)

Time spent on each task

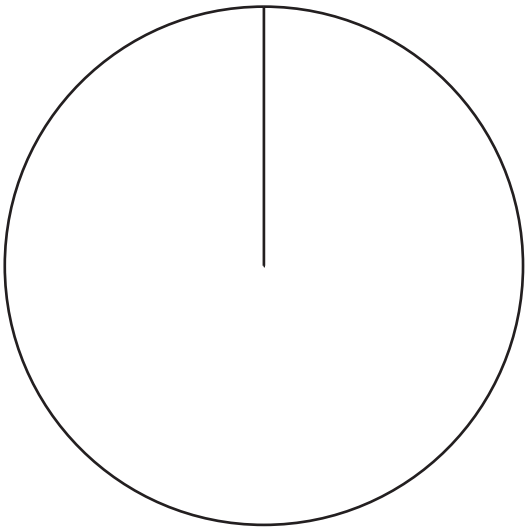

5. (continued)

The publishing company produced the following table to show all the tasks involved in publishing the book.

Activity	Description	Preceding task
A	illustrate cover	H
B	write 1st draft	C
C	research ideas	none
D	edit book	B
E	publish book	A,J,G
F	re-work	D
G	proof read	F
H	choose title	B
I	copyright	B
J	ISBN	I

(b) Complete the diagram below to show the tasks. **2**

(An additional diagram, if required, can be found on *page 18*.)

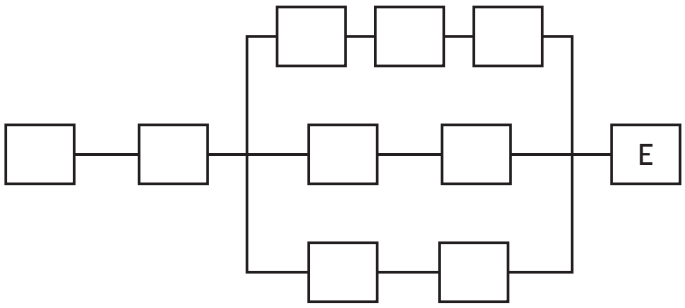

5. (continued)

The books are to be packed in boxes for transporting to the bookshops.

The dimensions of the book and the internal dimensions of the box are shown in the diagrams.

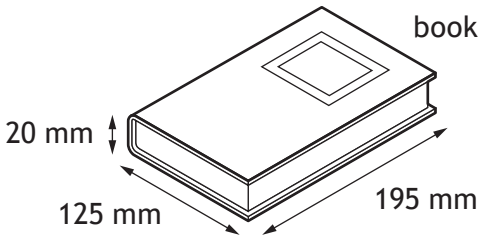

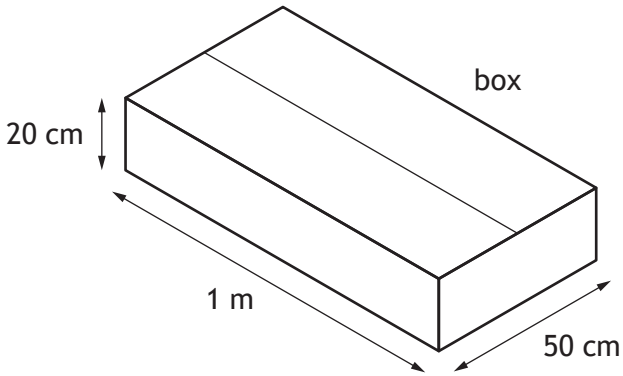

The books need to be laid with the front cover facing upwards in the boxes.

They must all be aligned in the same direction.

(c) Calculate the maximum number of books that can be packed into each box. **3**

5. (continued)

This is the fourth book that David has written in this series of books.

The cost of each book is shown in the table.

Book	Cost	Year published
1	£5.50	2013
2	£8.50	2015
3	£4.00	2016
4	£12.00	2019

The following special offers are available to buy all four books.

(d) Determine which shop offers the best deal for buying all four books.

Use your working to justify your answer. **3**

MARKS | DO NOT WRITE IN THIS MARGIN

6. A local primary school is having a summer event.

They plan to make shortbread to sell at the event.

- They make 10 trays of shortbread.
- Each tray contains 24 slices of shortbread.
- The total cost to make 10 trays of shortbread is £38.20.

The school want to make a profit of at least £20 from the sale of this shortbread.

(a) Calculate the minimum price that the school should charge for one slice of shortbread. **2**

6. (continued)

The local orienteering club set up a course at the event.

- Participants leave the start point and run on a bearing of 055° for 140 m to flag A.
- They then run on a bearing of 170° for 252 m to flag B.

(b) (i) Construct a scale drawing to illustrate the route. **3**

Use a scale of 1 cm : 40 m

(An additional diagram, if required, can be found on *page 19*.)

(ii) The pupils then return to the start point.

Use the scale drawing to determine the bearing and distance of the start point from flag B. **2**

MARKS | DO NOT WRITE IN THIS MARGIN

6. (continued)

Two of the games at the event are a lucky dip and a dice game.

The lucky dip has tickets numbered 1 to 150.
To win a prize the ticket needs to end in a zero or a five.

The dice game involves rolling two dice at the same time.
To win a prize a total of **9 or more** is needed.

(c) Determine which game has the higher probability of a prize being won. **4**

MARKS | DO NOT WRITE IN THIS MARGIN

7. Jamel keeps fish.

To make tap water safe for fish, a conditioner is added.

The volume of conditioner required is directly proportional to the volume of tap water.

5 ml of conditioner must be used for every 20 000 ml of tap water.

(a) Calculate the volume of conditioner required for 14 litres of tap water. **2**

7. (continued)

Jamel has a fish tank.

The fish tank is a cuboid with dimensions 30 cm by 30 cm by 42 cm.

The tank has a cylindrical light box at the bottom as shown.

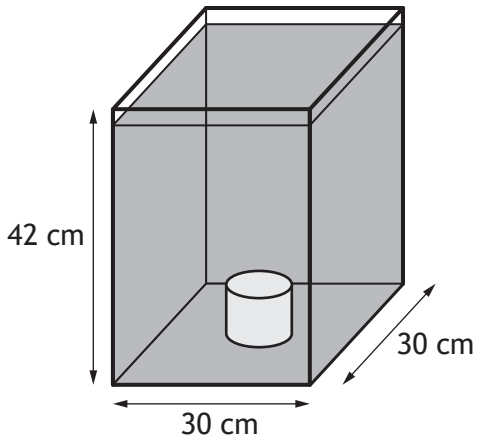

The cylindrical light box has a diameter of 10 cm and a height of 8 cm.

There is a **2 cm gap** between the top of the tank and the water level.

The light box **does not** hold any water.

(b) Calculate the volume of water in the tank. **4**

DO NOT WRITE IN THIS MARGIN

7. (continued)

Jamel bought a stand for this fish tank.

The top of the stand is circular.

The corners of the square base of the tank touch the edge of the circle as shown.

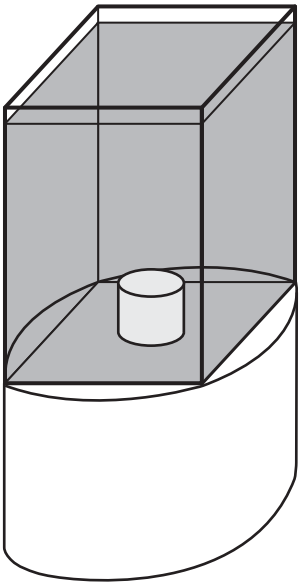

The diameter of the circle is shown by the dotted line in the aerial view.

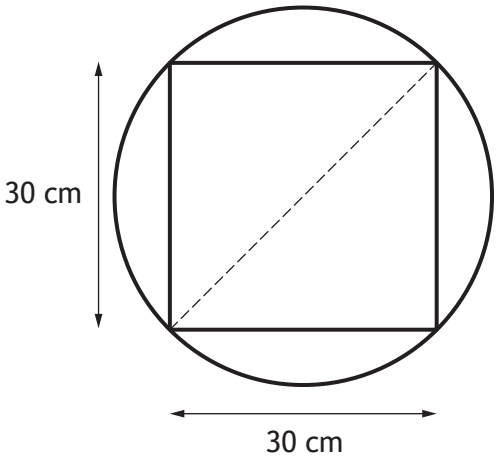

aerial view

MARKS | DO NOT WRITE IN THIS MARGIN

7. (continued)

(c) Calculate the area of the top of the stand.

Give your answer in **square metres**. **4**

[END OF SPECIMEN QUESTION PAPER]

MARKS | DO NOT WRITE IN THIS MARGIN

ADDITIONAL SPACE FOR ANSWERS

Additional diagram for use with question 5 (a)

Time spent on each task

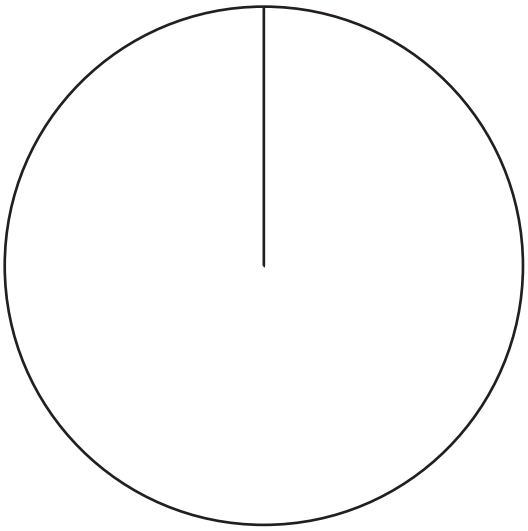

Additional diagram for use with question 5 (b)

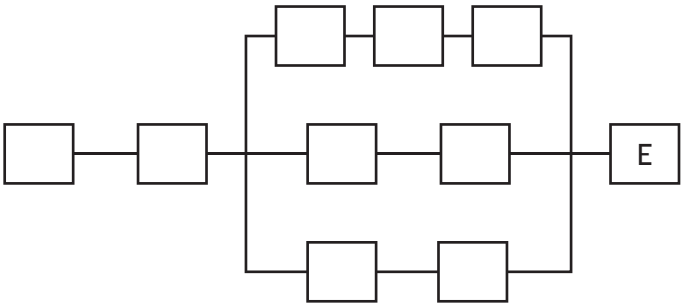

MARKS | DO NOT WRITE IN THIS MARGIN

ADDITIONAL SPACE FOR ANSWERS

Additional diagram for use with question 6 (b) (i)