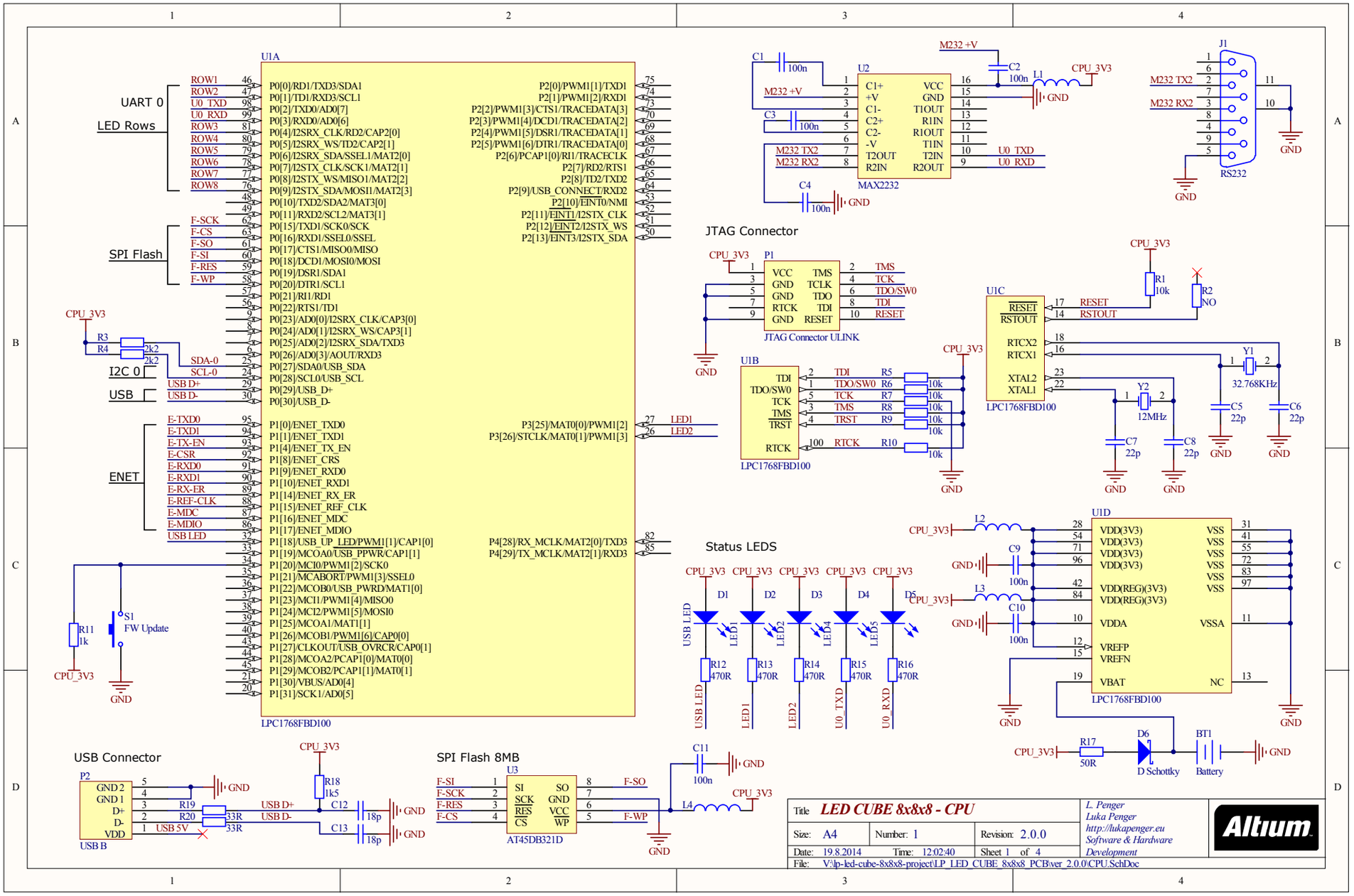
U1A
LPC1768FBD100
UART 0
LED Rows
SPI Flash
I2C 0
USB
ENET
USB LED
CPU_3V3
R3
R4
2k2
2k2
SDA-0
SCL-0
USB D+
USB D-
R11
1k
S1
FW Update
GND
P0[0]/RD1/TXD3/SDA1
P0[1]/TD1/RXD3/SCL1
P0[2]/TXD0/AD0[7]
P0[3]/RXD0/AD0[6]
P0[4]/I2SRX_CLK/RD2/CAP2[0]
P0[5]/I2SRX_WS/TD2/CAP2[1]
P0[6]/I2SRX_SDA/SSEL1/MAT2[0]
P0[7]/I2STX_CLK/SCK1/MAT2[1]
P0[8]/I2STX_WS/MISO1/MAT2[2]
P0[9]/I2STX_SDA/MOSI1/MAT2[3]
P0[10]/TXD2/SDA2/MAT3[0]
P0[11]/RXD2/SCL2/MAT3[1]
P0[15]/TXD1/SCK0/SCK
P0[16]/RXD1/SSEL0/SSEL
P0[17]/CTS1/MISO0/MISO
P0[18]/DCD1/MOSI0/MOSI
P0[19]/DSR1/SDA1
P0[20]/DTR1/SCL1
P0[21]/RI1/RD1
P0[22]/RTS1/TD1
P0[23]/AD0[0]/I2SRX_CLK/CAP3[0]
P0[24]/AD0[1]/I2SRX_WS/CAP3[1]
P0[25]/AD0[2]/I2SRX_SDA/TXD3
P0[26]/AD0[3]/AOUT/RXD3
P0[27]/SDA0/USB_SDA
P0[28]/SCL0/USB_SCL
P0[29]/USB_D+
P0[30]/USB_D-
P1[0]/ENET_TXD0
P1[1]/ENET_TXD1
P1[4]/ENET_TX_EN
P1[8]/ENET_CRS
P1[9]/ENET_RXD0
P1[10]/ENET_RXD1
P1[14]/ENET_RX_ER
P1[15]/ENET_REF_CLK
P1[16]/ENET_MDC
P1[17]/ENET_MDIO
P1[18]/USB_UP_LED/PWM1[1]/CAP1[0]
P1[19]/MCOA0/USB_PPWR/CAP1[1]
P1[20]/MCI0/PWM1[2]/SCK0
P1[21]/MCABORT/PWM1[3]/SSEL0
P1[22]/MCOB0/USB_PWRD/MAT1[0]
P1[23]/MCI1/PWM1[4]/MISO0
P1[24]/MCI2/PWM1[5]/MOSI0
P1[25]/MCOA1/MAT1[1]
P1[26]/MCOB1/PWM1[6]/CAP0[0]
P1[27]/CLKOUT/USB_OVRCR/CAP0[1]
P1[28]/MCOA2/PCAP1[0]/MAT0[0]
P1[29]/MCOB2/PCAP1[1]/MAT0[1]
P1[30]/VBUS/AD0[4]
P1[31]/SCK1/AD0[5]
P2[0]/PWM1[1]/TXD1
P2[1]/PWM1[2]/RXD1
P2[2]/PWM1[3]/CTS1/TRACEDATA[3]
P2[3]/PWM1[4]/DCD1/TRACEDATA[2]
P2[4]/PWM1[5]/DSR1/TRACEDATA[1]
P2[5]/PWM1[6]/DTR1/TRACEDATA[0]
P2[6]/PCAP1[0]/RI1/TRACECLK
P2[7]/RD2/RTS1
P2[8]/TD2/TXD2
P2[9]/USB_CONNECT/RXD2
P2[10]/EINT0/NMI
P2[11]/EINT1/I2STX_CLK
P2[12]/EINT2/I2STX_WS
P2[13]/EINT3/I2STX_SDA
P3[25]/MAT0[0]/PWM1[2]
P3[26]/STCLK/MAT0[1]/PWM1[3]
LED1
LED2
P4[28]/RX_MCLK/MAT2[0]/TXD3
P4[29]/TX_MCLK/MAT2[1]/RXD3
U2
MAX2232
C1
100n
C2
100n
C3
100n
C4
100n
L1
M232 +V
CPU_3V3
GND
C1+
+V
C1-
C2+
C2-
-V
T2OUT
R2IN
VCC
GND
T1OUT
R1IN
R1OUT
T1IN
T2IN
R2OUT
M232 TX2
M232 RX2
U0_TXD
U0_RXD
J1
RS232
JTAG Connector
P1
JTAG Connector ULINK
VCC
GND
RTCK
TMS
TCLK
TDO
TDI
RESET
TDO/SW0
U1B
LPC1768FBD100
R5
R6
R7
R8
R9
R10
10k
U1C
LPC1768FBD100
RESET
RSTOUT
RTCX2
RTCX1
XTAL2
XTAL1
R1
10k
R2
NO
Y1
32.768KHz
Y2
12MHz
C5
22p
C6
22p
C7
22p
C8
22p
Status LEDS
D1
D2
D3
D4
D5
LED1
LED2
LED4
LED5
R12
470R
R13
470R
R14
470R
R15
470R
R16
470R
U0_TXD
U0_RXD
U1D
LPC1768FBD100
VDD(3V3)
VDD(REG)(3V3)
VDDA
VREFP
VREFN
VBAT
VSS
VSSA
NC
L2
L3
C9
C10
100n
R17
50R
D6
D Schottky
BT1
Battery
USB Connector
P2
USB B
GND 2
GND 1
D+
D-
VDD
R19
R20
33R
USB 5V
R18
1k5
C12
C13
18p
SPI Flash 8MB
U3
AT45DB321D
SI
SCK
RES
CS
SO
GND
VCC
WP
F-SI
F-SCK
F-RES
F-CS
F-SO
F-WP
C11
100n
L4
Title
LED CUBE 8x8x8 - CPU
Size: A4
Number: 1
Revision: 2.0.0
Date: 19.8.2014
Time: 12:02:40
Sheet 1 of 4
File: V:\lp-led-cube-8x8x8-project\LP_LED_CUBE_8x8x8_PCB\ver_2.0.0\CPU.SchDoc
L. Penger
Luka Penger
http://lukapenger.eu
Software & Hardware Development
Altium

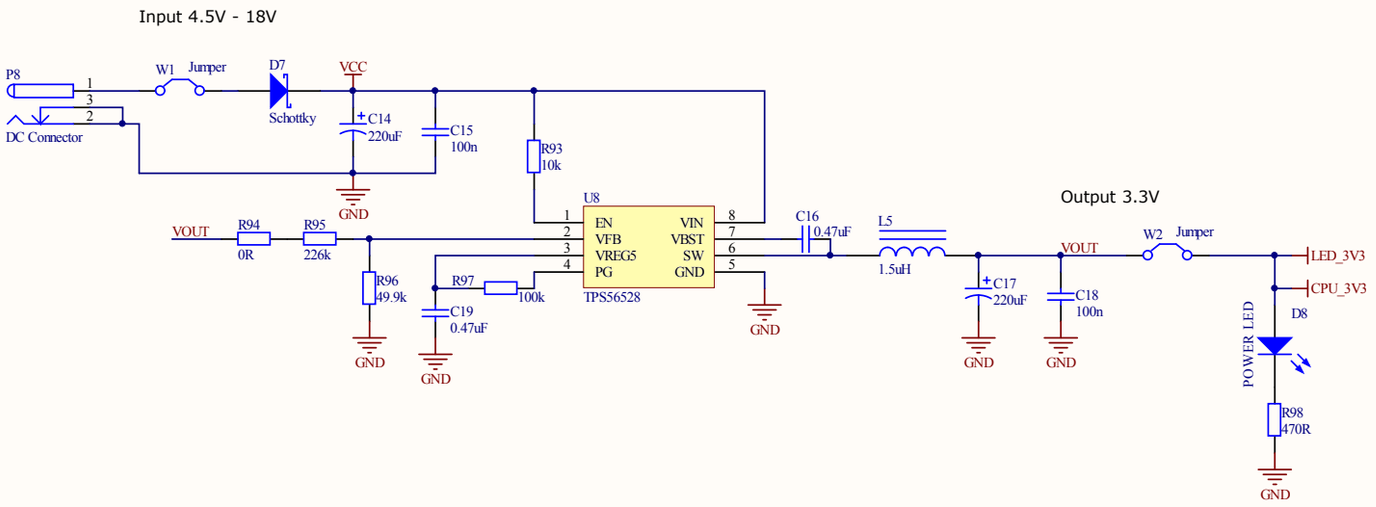

Title	*LED Cube 8x8x8 - POWER*		*L. Penger* *Luka Penger* *http://lukapenger.eu* *Software & Hardware Development*
Size: A4	Number: 2	Revision: 2.0.0	
Date: 19.8.2014	Time: 12:02:40	Sheet 2 of 4	
File: V:\lp-led-cube-8x8x8-project\LP_LED_CUBE_8x8x8_PCB\ver_2.0.0\POWER.SchDoc			

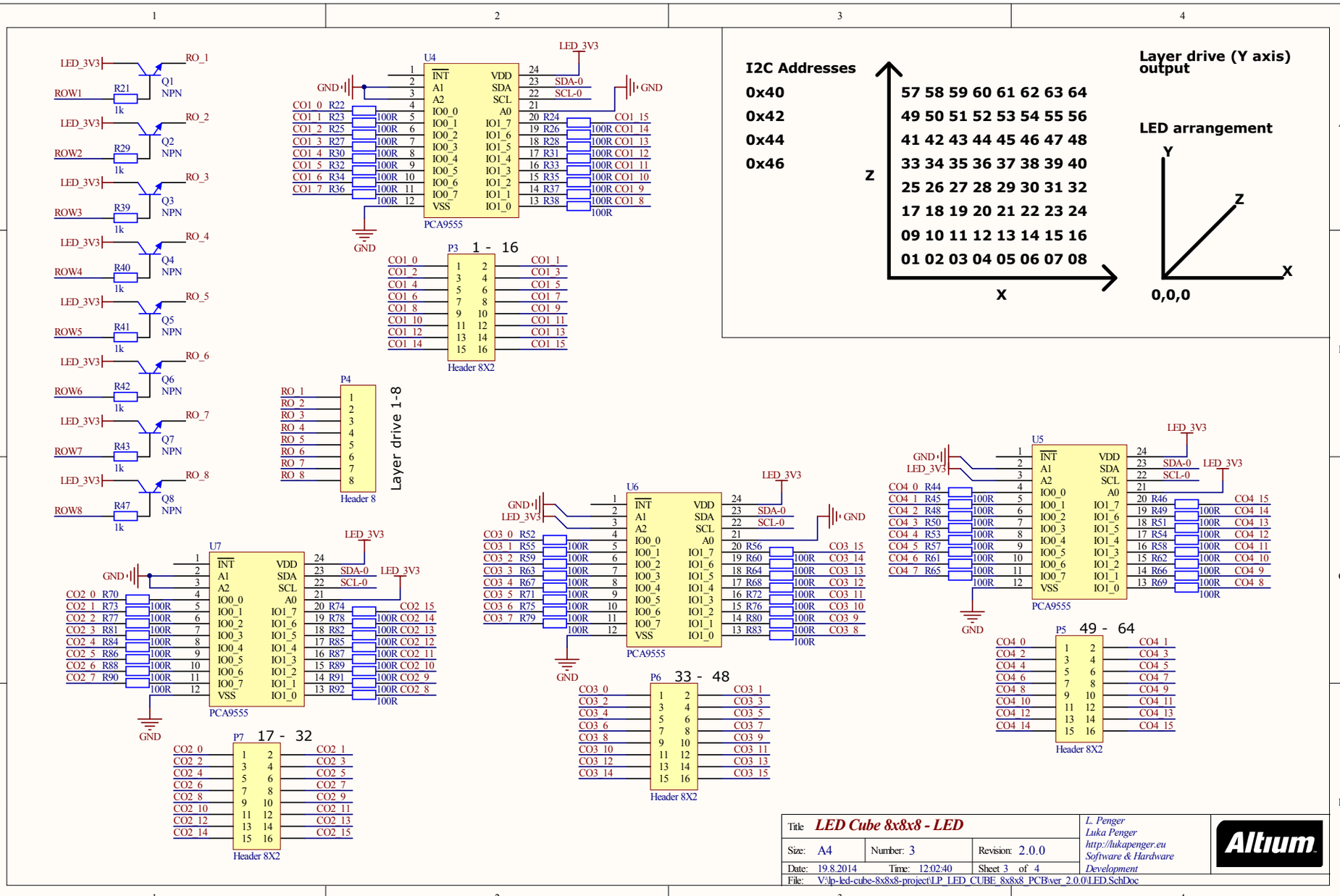
I2C Addresses
0x40
0x42
0x44
0x46
Z
57 58 59 60 61 62 63 64
49 50 51 52 53 54 55 56
41 42 43 44 45 46 47 48
33 34 35 36 37 38 39 40
25 26 27 28 29 30 31 32
17 18 19 20 21 22 23 24
09 10 11 12 13 14 15 16
01 02 03 04 05 06 07 08
X
Layer drive (Y axis) output
LED arrangement
Y
Z
X
0,0,0
U4
U5
U6
U7
PCA9555
P3 1 - 16
P4
Layer drive 1-8
Header 8
P5 49 - 64
P6 33 - 48
P7 17 - 32
Header 8X2
LED_3V3
GND
SDA-0
SCL-0
Q1 NPN
Q2 NPN
Q3 NPN
Q4 NPN
Q5 NPN
Q6 NPN
Q7 NPN
Q8 NPN
1k
100R
Title LED Cube 8x8x8 - LED
Size: A4
Number: 3
Revision: 2.0.0
Date: 19.8.2014
Time: 12:02:40
Sheet 3 of 4
File: V:\lp-led-cube-8x8x8-project\LP_LED_CUBE_8x8x8_PCB\ver_2.0.0\LED.SchDoc
L. Penger
Luka Penger
http://lukapenger.eu
Software & Hardware Development
Altium

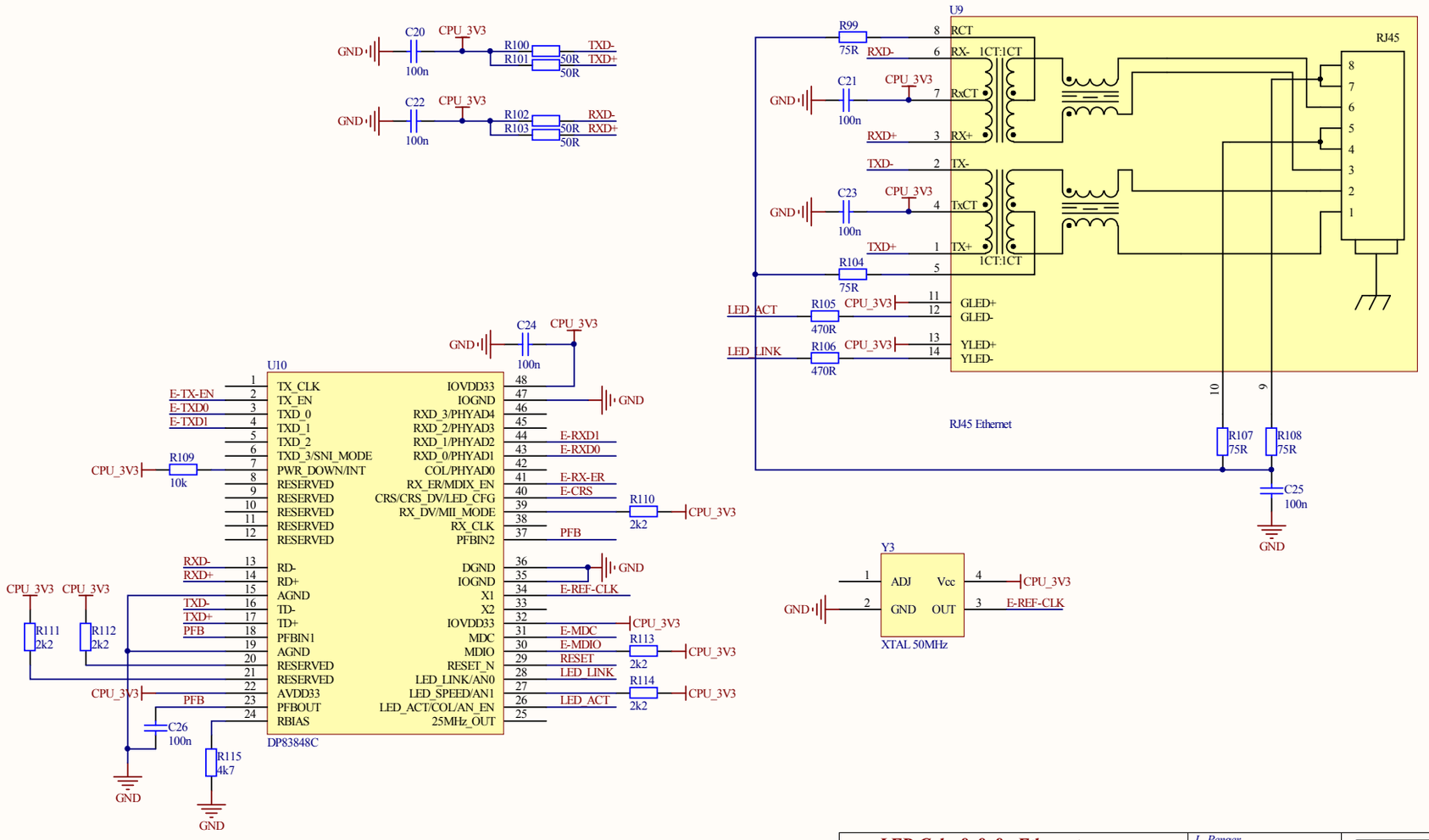

Title	*LED Cube 8x8x8 - Ethernet*		*L. Penger* *Luka Penger* *http://lukapenger.eu* *Software & Hardware Development*
Size: A4	Number: 4	Revision: 2.0.0	
Date: 19.8.2014	Time: 12:02:40	Sheet 4 of 4	
File: V:\lp-led-cube-8x8x8-project\LP_LED_CUBE_8x8x8_PCB\ver_2.0.0\ETH.SchDoc			

CPU SCH
CPU.SchDoc

LED SCH
LED.SchDoc

POWER SCH
POWER.SchDoc

ETHERNET SCH
ETH.SchDoc

Title		
Size A4	Number	Revision
Date: 19.8.2014		Sheet of
File: V:\lp-led-cube-8x8x8-project\..\LP_LED_CUBE_8x8x8.SchDoc		