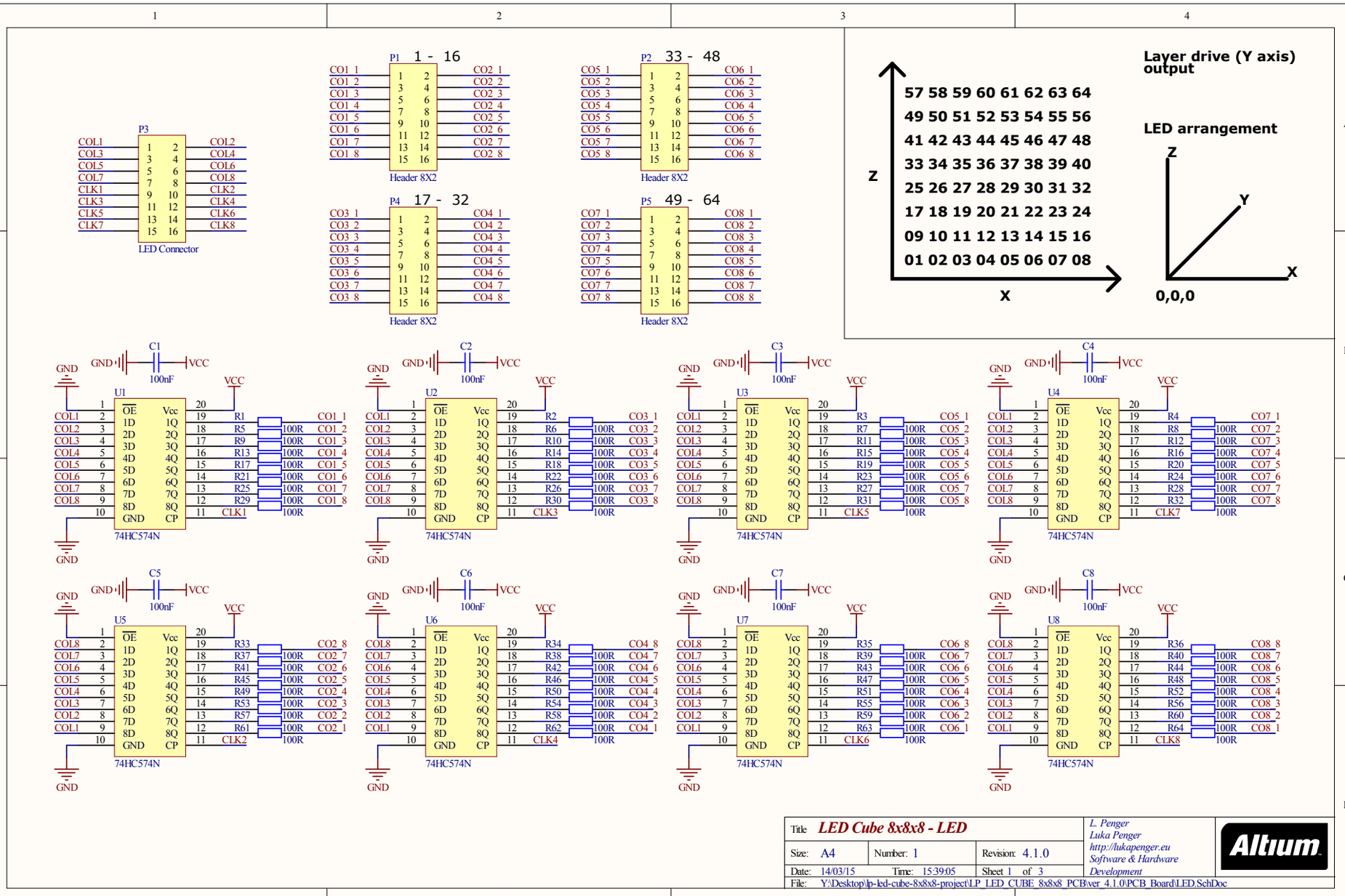
P3
LED Connector
P1 1 - 16
Header 8X2
P2 33 - 48
Header 8X2
P4 17 - 32
Header 8X2
P5 49 - 64
Header 8X2
Layer drive (Y axis) output
57 58 59 60 61 62 63 64
49 50 51 52 53 54 55 56
41 42 43 44 45 46 47 48
33 34 35 36 37 38 39 40
25 26 27 28 29 30 31 32
17 18 19 20 21 22 23 24
09 10 11 12 13 14 15 16
01 02 03 04 05 06 07 08
Z
X
LED arrangement
Z
Y
X
0,0,0
C1 100nF
C2 100nF
C3 100nF
C4 100nF
C5 100nF
C6 100nF
C7 100nF
C8 100nF
U1
U2
U3
U4
U5
U6
U7
U8
74HC574N
GND
VCC
100R
Title LED Cube 8x8x8 - LED
Size: A4
Number: 1
Revision: 4.1.0
Date: 14/03/15
Time: 15:39:05
Sheet 1 of 3
File: Y:\Desktop\lp-led-cube-8x8x8-project\LP_LED_CUBE_8x8x8_PCB\ver_4.1.0\PCB_Board\LED.SchDoc
L. Penger
Luka Penger
http://lukapenger.eu
Software & Hardware Development
Altium

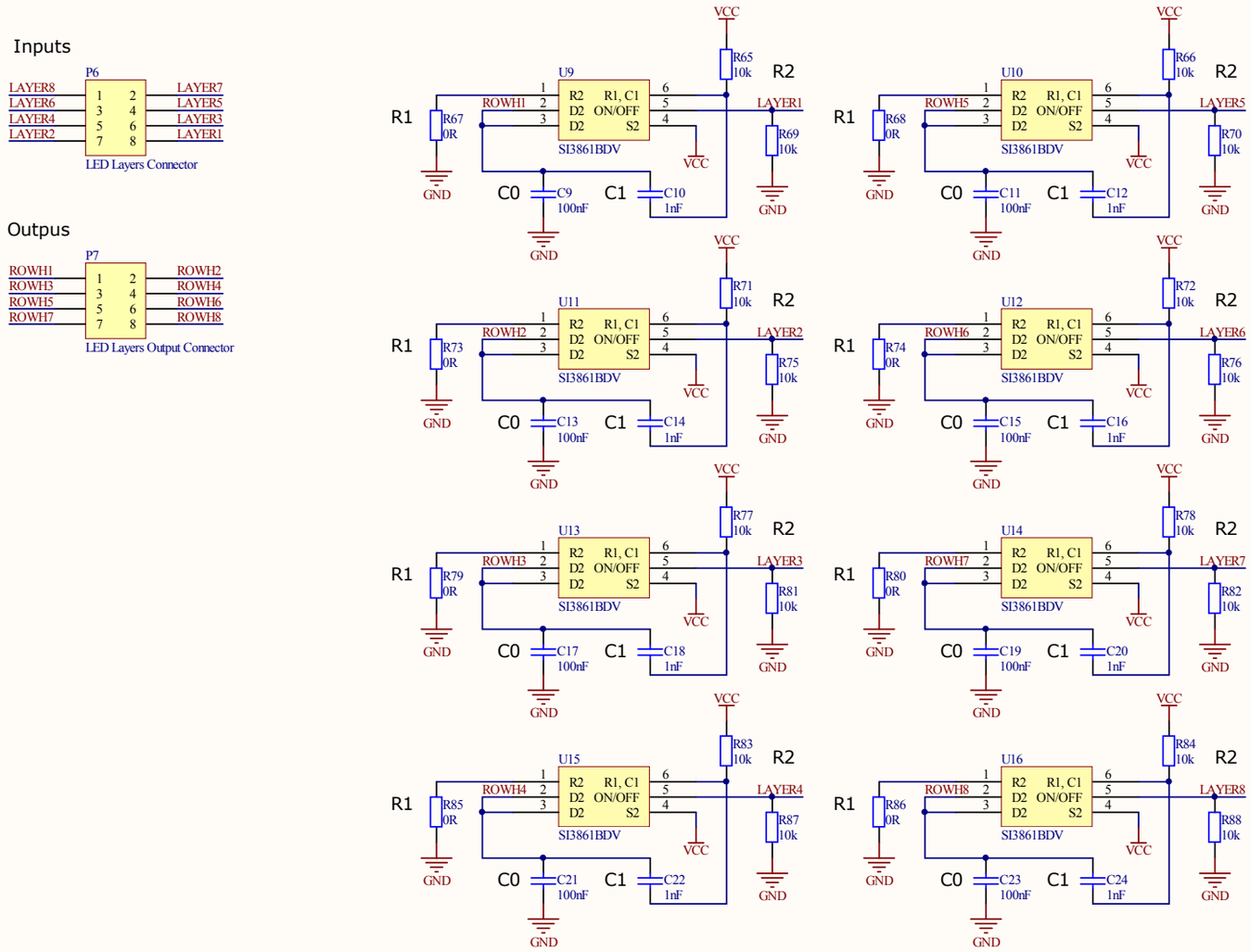

Title	*LED Cube 8x8x8 - LED*		*L. Penger* *Luka Penger* *http://lukapenger.eu* *Software & Hardware Development*
Size: A4	Number: 2	Revision: 4.1.0	
Date: 14/03/15	Time: 15:39:05	Sheet 2 of 3	
File: Y:\Desktop\lp-led-cube-8x8x8-project\LP_LED_CUBE_8x8x8_PCB\ver_4.1.0\PCB_Board\LED_ROWS.SchDoc			

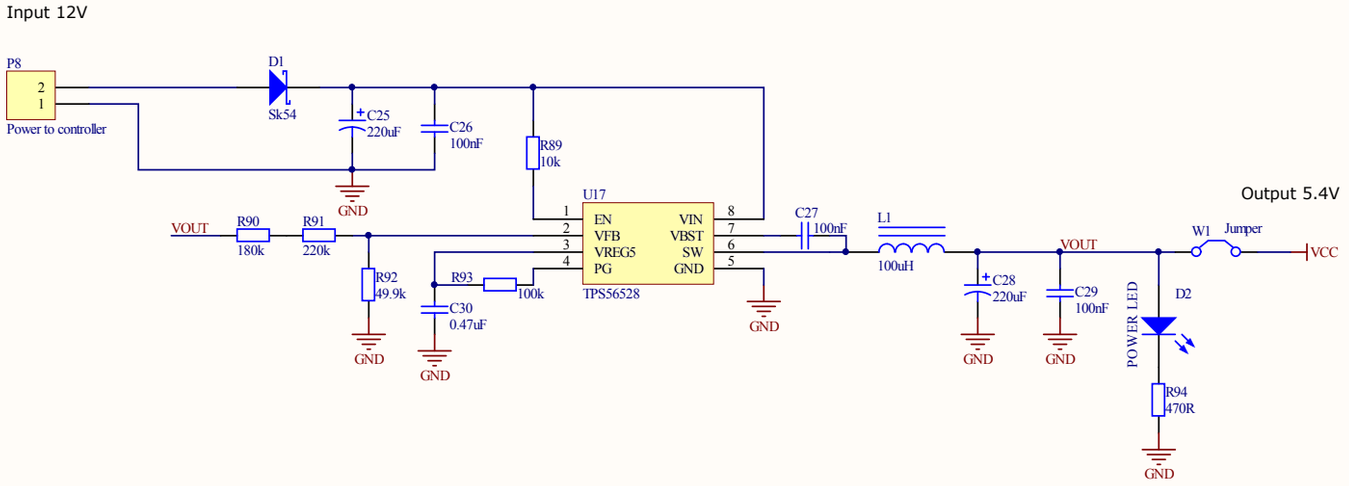

Title	*LED Cube 8x8x8 - POWER*		*L. Penger* *Luka Penger* *http://lukapenger.eu* *Software & Hardware Development*
Size: A4	Number: 3	Revision: 4.1.0	
Date: 14/03/15	Time: 15:39:05	Sheet 3 of 3	
File: Y:\Desktop\lp-led-cube-8x8x8-project\LP_LED_CUBE_8x8x8_PCB\ver_4.1.0\PCB_Board\POWER.SchDoc			

POWER SCH
POWER.SchDoc

LED SCH
LED.SchDoc

LED ROWS
LED_ROWS.SchDoc

Title		
Size A4	Number	Revision
Date: 14/03/15		Sheet of
File: Y:\Desktop\..\LP_LED_CUBE_8x8x8.SchDoc		Drawn By: