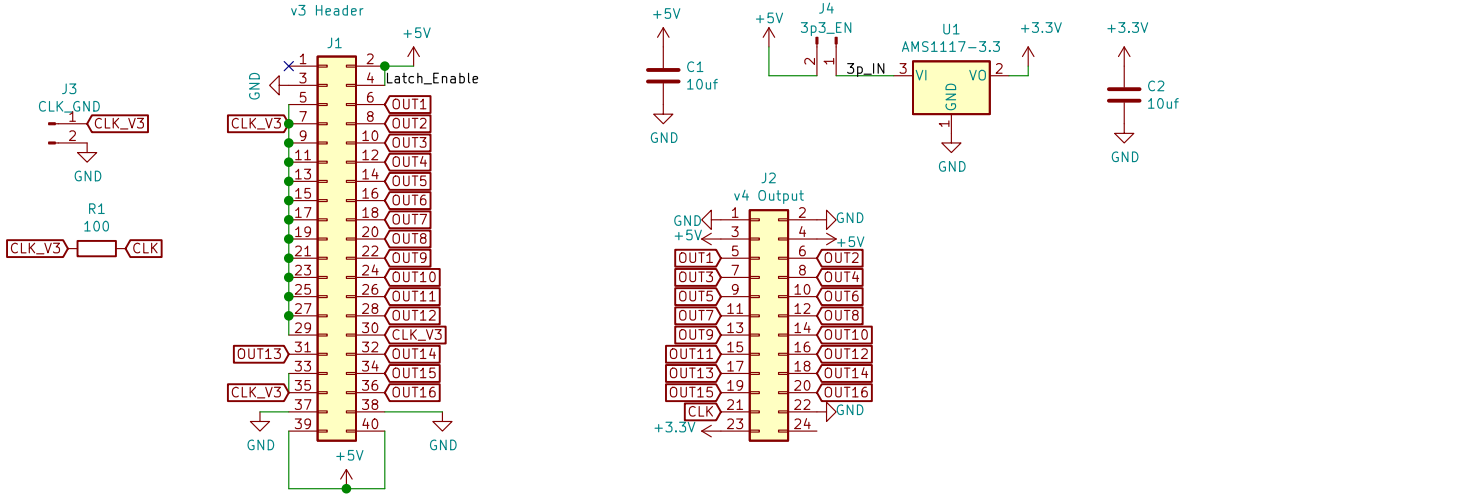


H1 MountingHole
H2 MountingHole
H3 MountingHole
H4 MountingHole

**Scott Hanson**

Sheet: /
File: 3to4_Adapter.sch

***Title: v3 to v4***

| | | |
|---|---|---|
| Size: A4 | Date: 2021-09-03 | **Rev: v2** |
| KiCad E.D.A. kicad (5.1.10)-1 | | Id: 1/1 |