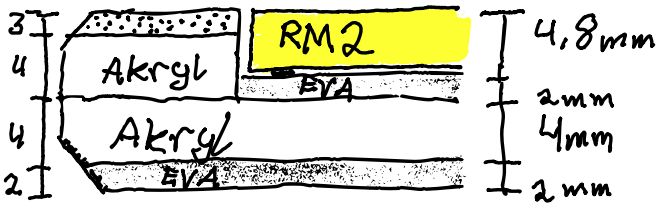
3
4
4
2
Akryl
Akryl
RM2
EVA
EVA
4,8mm
2mm
4mm
2mm

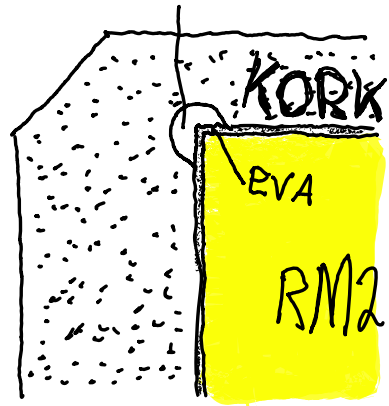
KORK
EVA
RM2

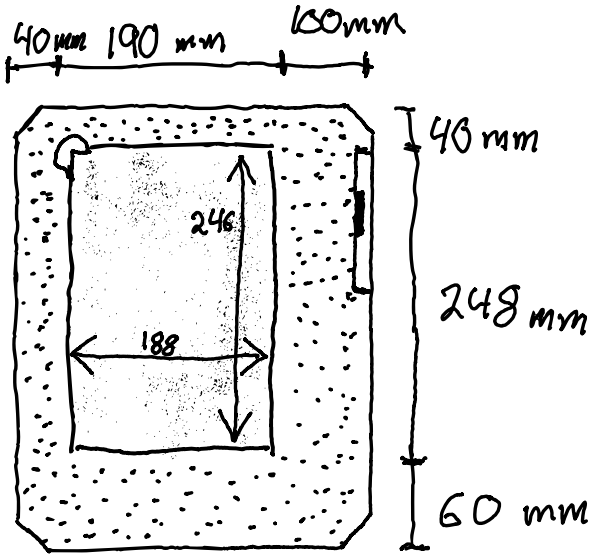
40mm
190 mm
100mm
246
188
40 mm
248 mm
60 mm

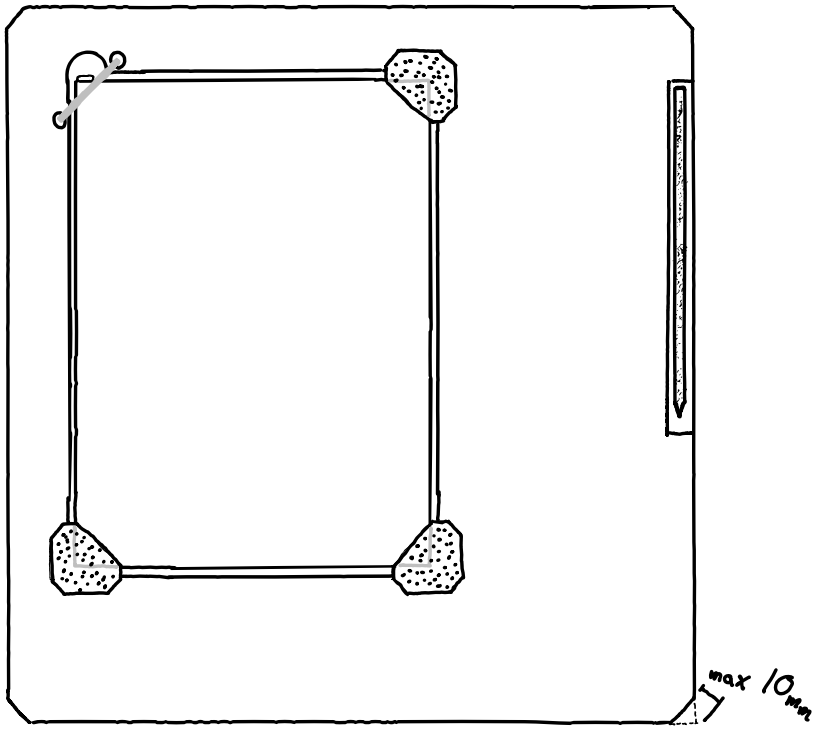
max 10mm

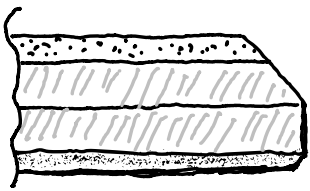

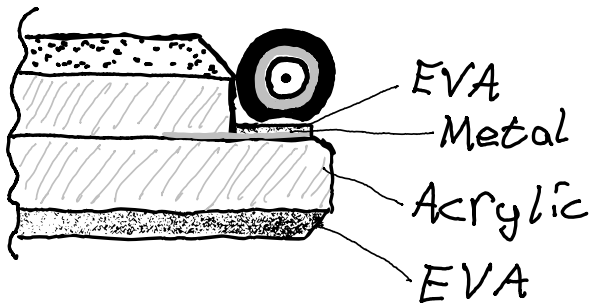
EVA
Metal
Acrylic
EVA

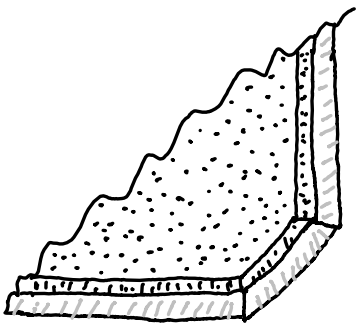

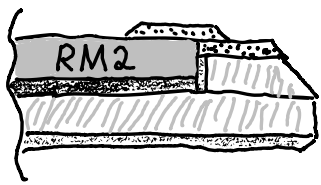
RM2

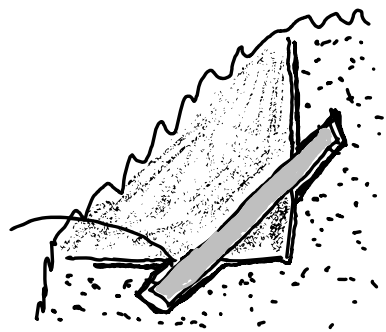

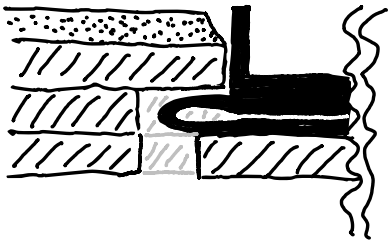

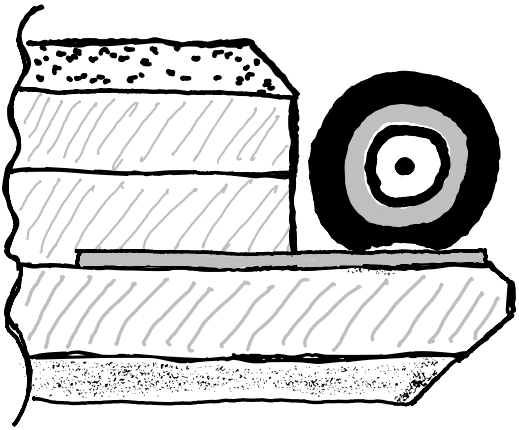

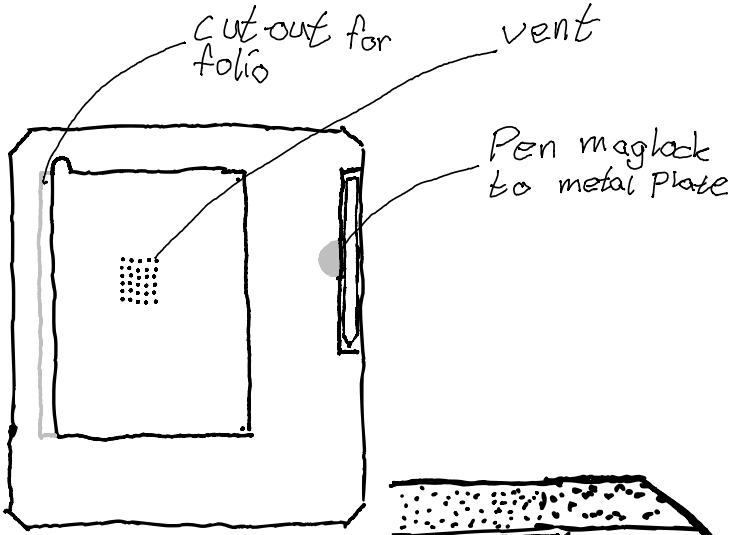
cut-out for folio
vent
Pen maglock to metal Plate

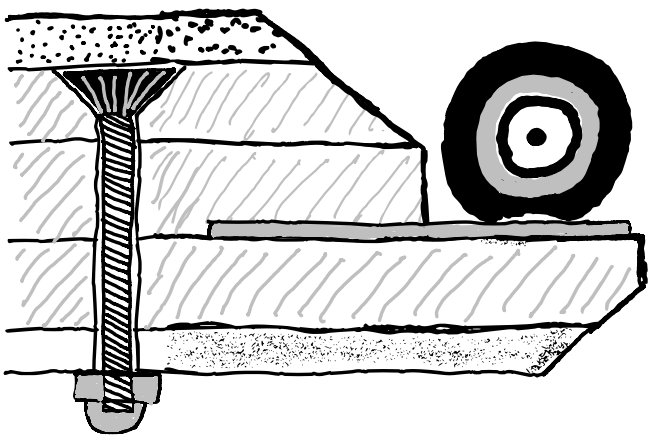

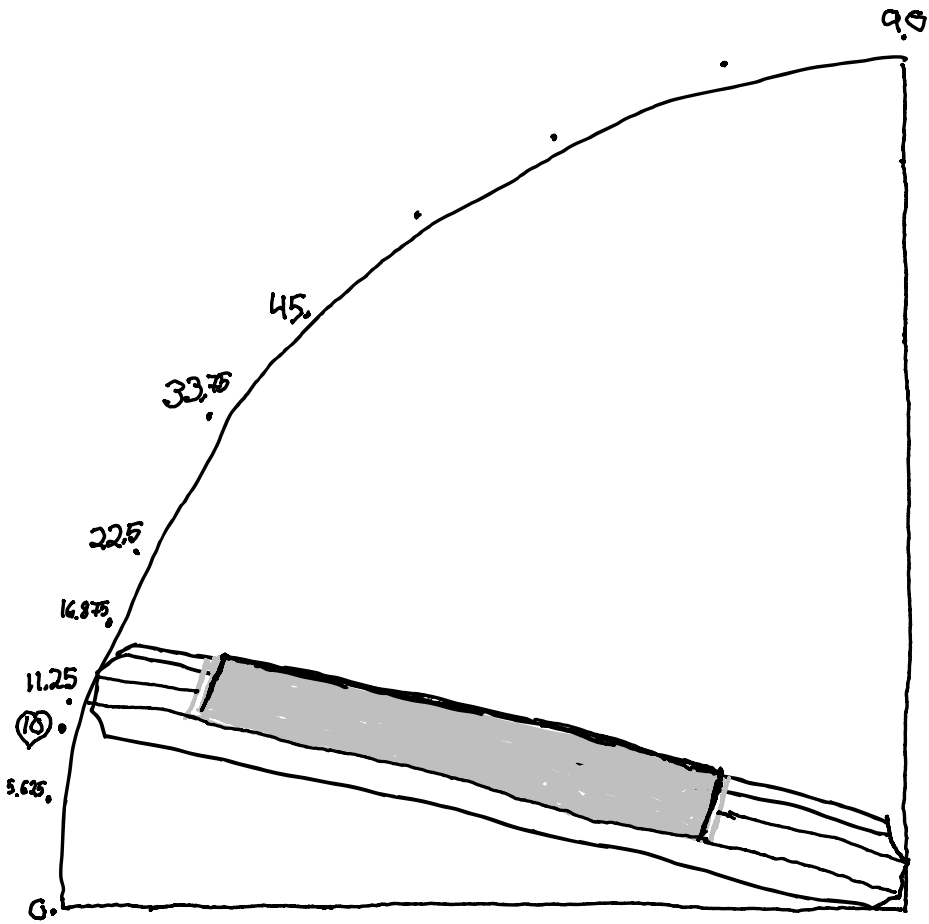
90
45.
33.75
22.5
16.875
11.25
10
5.625
0.