National Testing Agency

Question Paper Name:	87 Computer Science and Applications Set 2
Subject Name:	87 Computer Science and Applications
Creation Date:	2018-12-20 15:39:02
Duration:	180
Total Marks:	300
Display Marks:	Yes
Share Answer Key With Delivery Engine:	Yes
Actual Answer Key:	Yes

Paper I

Group Number :	1
Group Id :	913943141
Group Maximum Duration :	60
Group Minimum Duration :	60
Revisit allowed for view? :	No
Revisit allowed for edit? :	No
Break time:	30
Mandatory Break time:	Yes
Group Marks:	100

00 General Aptitude

Section Id :	913943141
Section Number :	1
Section type :	Online
Mandatory or Optional:	Mandatory
Number of Questions:	42
Number of Questions to be attempted:	42
Section Marks:	100
Display Number Panel:	Yes
Group All Questions:	No

Sub-Section Number:	1
Sub-Section Id:	913943541
Question Shuffling Allowed :	Yes

Question Number : 1 Question Id : 91394310693 Question Type : MCQ Option Shuffling : Yes Display Question Number : Yes Single Line Question Option : No Option Orientation : Vertical

Correct Marks : 2 Wrong Marks : 0

NTA UGC NET YANI NIMI G NET

Which among the following best describes emotional intelligence as a learner characteristic ?

(a) Recognise their own and other people's emotions

(b) Expressing their emotions strongly

(c) Use emotional information to guide thinking and behaviour

(d) Good observation, scientific thinking and deductive reasoning

(e) Adjusting emotions to adapt to environments

(f) Being creative and open to diverse viewpoints

Code :

Options :

1. (a), (d) and (f)

2. (c), (e) and (f)

3. (a), (c) and (e)

4. (b), (d) and (e)

Question Number : 1 Question Id : 91394310693 Question Type : MCQ Option Shuffling : Yes Display Question Number : Yes Single Line Question Option : No Option Orientation : Vertical

Correct Marks : 2 Wrong Marks : 0

निम्नांकित में से कौन एक शिक्षार्थी के गुण के रूप में भावनात्मक बुद्धि को उत्तम विधि से वर्णित करता है?

(a) अपनी स्वयं की और अन्य लोगों की भावनात्मक बुद्धि की पहचान करना

(b) अपनी भावनाओं को दृढ़ता से व्यक्त करना

(c) सोच और व्यवहार को निर्देशित करने के लिए भावनात्मक सूचना का प्रयोग करना

(d) उत्तम प्रेक्षण, वैज्ञानिक चिन्तन और निगमनात्मक तर्कना

(e) परिवेश के प्रति अनुकूलन हेतु भावनाओं का समायोजन

(f) रचनात्मक और विविध दृष्टिकोणों के प्रति खुला विचार वाला होना

कूट :

Options :

1. (a), (d) और (f)

2. (c), (e) और (f)

3. (a), (c) और (e)

NTA UGC NET YANI NIMI G NET

4. (b), (d) और (e)

Question Number : 2 Question Id : 91394310694 Question Type : MCQ Option Shuffling : Yes Display Question Number : Yes Single Line Question Option : No Option Orientation : Vertical

Correct Marks : 2 Wrong Marks : 0

Which among the following can best be used as an asynchronous teaching aid ?

(a) Skype (b) Blog (c) Facebook post

(d) Online chat (e) Email (f) Google Hangout

Code :

Options :

1. (a), (c) and (f)

2. (c), (e) and (f)

3. (a), (b) and (c)

4. (b), (c) and (e)

Question Number : 2 Question Id : 91394310694 Question Type : MCQ Option Shuffling : Yes Display Question Number : Yes Single Line Question Option : No Option Orientation : Vertical

Correct Marks : 2 Wrong Marks : 0

निम्नांकित में से किसे एक अतुल्यकालिक (एसिंक्रोनस) सहायक शिक्षण सामग्री के रूप में प्रयुक्त किया जा सकता है?

(a) स्काइप (b) ब्लॉग (c) फेसबुक पोस्ट

(d) ऑनलाइन चैट (e) ईमेल (f) गूगल हैंगआउट

कूट :

Options :

1. (a), (c) और (f)

2. (c), (e) और (f)

3. (a), (b) और (c)

4. (b), (c) और (e)

NTA UGC NET YANI NIMI G NET

Question Number : 3 Question Id : 91394310695 Question Type : MCQ Option Shuffling : Yes Display Question Number : Yes Single Line Question Option : No Option Orientation : Vertical

Correct Marks : 2 Wrong Marks : 0

The goal of formative assessment is to :

Options :

1. Promote student to next level

2. Monitor student learning to provide ongoing feedback

3. Compare student learning against a standard or benchmark

4. Form a group of students on the basis of their learning

Question Number : 3 Question Id : 91394310695 Question Type : MCQ Option Shuffling : Yes Display Question Number : Yes Single Line Question Option : No Option Orientation : Vertical

Correct Marks : 2 Wrong Marks : 0

निर्माणात्मक मूल्यांकन का लक्ष्य है :

Options :

1. विद्यार्थी को अगले स्तर तक बढ़ाना

2. सतत फीडबैक प्रदान विद्यार्थी अधिगम की निगरानी

3. एक मानक अथवा बेंचमार्क के आधार पर विद्यार्थी अधिगम की तुलना

4. विद्यार्थियों के अधिगम के आधार पर उनके समूह बनाना

Question Number : 4 Question Id : 91394310696 Question Type : MCQ Option Shuffling : Yes Display Question Number : Yes Single Line Question Option : No Option Orientation : Vertical

Correct Marks : 2 Wrong Marks : 0

In a school, in which there are large number of failures, you may like to develop test for eliminating those who are likely to have substantial difficulties in meeting the academic goals of teaching. For this you need to develop test which should be able to predict the individual's ability or readiness to undertake the study of a school subject successfully. What is the name of such tests ?

Options :

1. Prognostic tests

2. Achievement tests

NTA UGC NET YANI NIMI G NET

3. Attitude tests

4. Analytical tests

Question Number : 4 Question Id : 91394310696 Question Type : MCQ Option Shuffling : Yes Display Question Number : Yes Single Line Question Option : No Option Orientation : Vertical

Correct Marks : 2 Wrong Marks : 0

एक ऐसे विद्यालय में जिसमें अनुत्तीर्णों की संख्या बहुत ज्यादा हो, शिक्षण के अकादमिक उद्देश्यों की प्राप्ति में पर्याप्त कठिनाई की संभावना वालों को बाहर निकालने के लिए आप प्रश्नपत्र विकसित करना चाह सकते हैं। इसके लिए आपको ऐसा प्रश्नपत्र विकसित करना होगा जो किसी व्यक्ति की विद्यालय विषय का सफलतापूर्वक अध्ययन करने की योग्यता और तत्परता का अनुमान लगा सके। इस प्रकार के परीक्षणों का क्या नाम है?

Options :

1. भविष्यसूचक परीक्षण

2. उपलब्धि परीक्षण

3. व्यवहार परीक्षण

4. विश्लेषणात्मक परीक्षण

Question Number : 5 Question Id : 91394310697 Question Type : MCQ Option Shuffling : Yes Display Question Number : Yes Single Line Question Option : No Option Orientation : Vertical

Correct Marks : 2 Wrong Marks : 0

In teaching learning context, results of an evaluation are useful to teachers in various ways. Which among the following is most important use for a teacher ?

Options :

1. planning instruction and knowing the effectiveness of the teaching strategies used by them.

2. getting information about student's study interests.

3. to decide placement of students in other institutions.

4. to identify home influence on students.

NTA UGC NET YANI NIMI G NET

Question Number : 5 Question Id : 91394310697 Question Type : MCQ Option Shuffling : Yes Display Question Number : Yes Single Line Question Option : No Option Orientation : Vertical

Correct Marks : 2 Wrong Marks : 0

शिक्षण अधिगम परिप्रेक्ष्य में, किसी मूल्यांकन के नतीजे शिक्षकों के लिए अनेक प्रकार से उपयोगी होते हैं। निम्नांकित में से शिक्षक के लिए क्या सर्वाधिक महत्वपूर्ण उपयोग क्या है?

Options :

1. अनुदेश योजना बनाने में और अपनाई गई शिक्षण रणनीति की प्रभावशीलता का पता लगाने में उपयोग।
2. छात्रों की अध्ययन रुचियों के बारे में जानकारी प्राप्त करना।
3. छात्रों के अन्य संस्थानों में प्लेसमेंट के बारे में निर्णय लेने के लिए मूल्यांकन नतीजे का उपयोग।
4. छात्रों पर कुछ प्रभावों की पहचान करने में मूल्यांकन नतीजे का उपयोग।

Question Number : 6 Question Id : 91394310698 Question Type : MCQ Option Shuffling : Yes Display Question Number : Yes Single Line Question Option : No Option Orientation : Vertical

Correct Marks : 2 Wrong Marks : 0

The characteristics of scientific method of research are :

(a) Empiricism (b) Objectivity (c) Systematic

(d) Secretive (e) Security related (f) Predictive

Code :

Options :

1. (a), (b), (d) and (e)
2. (c), (d), (e) and (f)
3. (d), (e), (f) and (a)
4. (a), (b), (c) and (f)

NTA UGC NET YANI NIMI G NET

Question Number : 6 Question Id : 91394310698 Question Type : MCQ Option Shuffling : Yes Display Question Number : Yes Single Line Question Option : No Option Orientation : Vertical

Correct Marks : 2 Wrong Marks : 0

शोध की वैज्ञानिक विधि की विशेषता है :

(a) अनुभववाद (b) वस्तुनिष्ठता (c) सुव्यवस्थित

(d) गोपनीय (e) सुरक्षा से संबंधित (f) भविष्यसूचक

कूट :

Options :

1. (a), (b), (d) और (e)

2. (c), (d), (e) और (f)

3. (d), (e), (f) और (a)

4. (a), (b), (c) और (f)

Question Number : 7 Question Id : 91394310699 Question Type : MCQ Option Shuffling : Yes Display Question Number : Yes Single Line Question Option : No Option Orientation : Vertical

Correct Marks : 2 Wrong Marks : 0

In a research setting, participants may act differently because they think they are getting special attention. This reaction of treatment group to the special attention rather than the treatment itself is called as :

Options :

1. Hawthrone effect

2. Attention deficit

3. Jung effect

4. Marlov effect

NTA UGC NET YANI NIMI G NET

Question Number : 7 Question Id : 91394310699 Question Type : MCQ Option Shuffling : Yes Display Question Number : Yes Single Line Question Option : No Option Orientation : Vertical

Correct Marks : 2 Wrong Marks : 0

एक शोध परिवेश में, प्रतिभागी सिर्फ इस कारण अलग तरह से व्यवहार कर सकते हैं क्योंकि उन्हें लगता है कि उन पर विशेष ध्यान दिया जा रहा है। व्यवहार की बजाये विशेष ध्यान के प्रति उपचारित समूह का यह बर्ताव क्या कहलाता है?

Options :

1. हॉथ्रोन प्रभाव

2. ध्यान की कमी

3. युंग प्रभाव

4. मारलोव प्रभाव

Question Number : 8 Question Id : 91394310700 Question Type : MCQ Option Shuffling : Yes Display Question Number : Yes Single Line Question Option : No Option Orientation : Vertical

Correct Marks : 2 Wrong Marks : 0

When a reviewer reviews a research article without knowing the author's name, it is referred to as :

Options :

1. Anonymous review

2. Behind - the - curtain review

3. Blind review

4. Uncategorised review

Question Number : 8 Question Id : 91394310700 Question Type : MCQ Option Shuffling : Yes Display Question Number : Yes Single Line Question Option : No Option Orientation : Vertical

Correct Marks : 2 Wrong Marks : 0

जब कोई समीक्षक लेखक का नाम जाने बगैर एक शोध लेख की समीक्षा करता है तो यह क्या कहलाता है?

Options :

1. गुमनाम समीक्षा

2. पार्श्व समीक्षा

3. अप्रकट समीक्षा

4. अश्रेणीकृत समीक्षा

NTA UGC NET YANI NIMI G NET

Question Number : 9 Question Id : 91394310701 Question Type : MCQ Option Shuffling : Yes Display Question Number : Yes Single Line Question Option : No Option Orientation : Vertical

Correct Marks : 2 Wrong Marks : 0

The kind of numbers which do not represent amounts but instead represent kind (different qualities, types or categories) are called as :

Options :

1. Nominal

2. Ordinal

3. Prime

4. Absolute

Question Number : 9 Question Id : 91394310701 Question Type : MCQ Option Shuffling : Yes Display Question Number : Yes Single Line Question Option : No Option Orientation : Vertical

Correct Marks : 2 Wrong Marks : 0

वैसी संख्यायें जो राशि नहीं बल्कि जाति (भिन्न गुण, प्रकार अथवा श्रेणी) की द्योतक होती हैं, क्या कहलाती हैं?

Options :

1. संज्ञात्मक

2. वर्गीय

3. अभाज्य

4. पूर्ण

Question Number : 10 Question Id : 91394310702 Question Type : MCQ Option Shuffling : Yes Display Question Number : Yes Single Line Question Option : No Option Orientation : Vertical

Correct Marks : 2 Wrong Marks : 0

Poster sessions in research conferences provide better opportunities for :

Options :

1. Formal speeches

2. Display of common interest

3. Focus group discussions

4. Inter-personal interactions

NTA UGC NET YANI NIMI G NET

Question Number : 10 Question Id : 91394310702 Question Type : MCQ Option Shuffling : Yes Display Question Number : Yes Single Line Question Option : No Option Orientation : Vertical

Correct Marks : 2 Wrong Marks : 0

शोध सम्मेलनों में पोस्टर सत्र निम्नांकित में से किसके लिए उत्तम अवसर प्रदान करते हैं?

Options :

1. औपचारिक भाषण

2. साझा हितों का प्रदर्शन

3. समूह विशेष चर्चा

4. अंतर्वैयक्तिक अंत:क्रिया

Sub-Section Number: 2
Sub-Section Id: 913943542
Question Shuffling Allowed : Yes

Question Id : 91394310703 Question Type : COMPREHENSION Sub Question Shuffling Allowed : Yes Group Comprehension Questions : No

Question Numbers : (11 to 15)

Question Label : Comprehension

Read the passage carefully and answer questions **11** to **15** :

Today, in the digital age, who owns information owns the future. In this digital world, we face a fundamental choice between open and closed. In an open world information is shared by all freely available to everyone. In a closed world information is exclusively owned and controlled by a few. Today, we live in a closed world a world of extraordinary and growing concentrations in power and wealth. A world where innovation is held back and distorted by the dead hand of monopoly; where essential medicines are affordable only to the rich, where freedom is threatened by manipulation, exclusion and exploitation; and each click you make, every step you take, they will be watching you. By contrast, in an open world all of us would be enriched by the freedom to use, enjoy and build on everything from statistics and research to newspaper stories and books, from software and films to music and medical formulae. In an open world, we would pay innovators and creators more and more fairly, using market-driven remuneration rights in place of intellectual property monopoly rights. As they have improved, digital technologies have taken on ever more of the tasks that humans used to do, from manufacturing cars to scheduling appointments. And in the next few decades, artificial intelligence may well be not only driving our cars for us but drafting legal contracts and performing surgery. On the face of it, we have much to gain if machines can spare us tedious or routine tasks and perform them with greater accuracy. The danger, though, is that robots run on information-software, data algorithms and at present the ownership of this sort of information is unequal. And because it is protected by our closed system of intellectual property rights.

Sub questions

Question Number : 11 Question Id : 91394310704 Question Type : MCQ Option Shuffling : Yes Display Question Number : Yes Single Line Question Option : No Option Orientation : Vertical

Correct Marks : 2 Wrong Marks : 0

How will an open world function ?

Options :

1. With limited choices

2. Information is available to everyone

3. Information is exclusive

NTA UGC NET YANI NMIG NET

4. Information is controlled

Question Number : 12 Question Id : 91394310705 Question Type : MCQ Option Shuffling : Yes Display Question Number : Yes Single Line Question Option : No Option Orientation : Vertical

Correct Marks : 2 Wrong Marks : 0

Which of these characteristics of a closed world ?

(a) Concentration in power and wealth increases.

(b) Innovation is controlled.

(c) Only the rich have access to medicines.

(d) Freedom is manipulated.

(e) Information is shared by all.

(f) Creativity is recognised.

Code :

Options :

1. (a), (b), (c) and (d)

2. (b), (c), (d) and (e)

3. (c), (d), (e) and (f)

4. (d), (e), (f) and (a)

NTA UGC NET YANI NIMI G NET

Question Number : 13 Question Id : 91394310706 Question Type : MCQ Option Shuffling : Yes Display Question Number : Yes Single Line Question Option : No Option Orientation : Vertical

Correct Marks : 2 Wrong Marks : 0

What is the status of intellectual property rights in an open world ?

Options :

1. They are monopoly rights

2. Medical formulae are restricted

3. Replaced by remuneration rights

4. Protected proprietorial rights

Question Number : 14 Question Id : 91394310707 Question Type : MCQ Option Shuffling : Yes Display Question Number : Yes Single Line Question Option : No Option Orientation : Vertical

Correct Marks : 2 Wrong Marks : 0

What is the impact of digital technologies on the present day world ?

Options :

1. Creativity is sidelined.

2. Mechanical accuracy is distorted.

3. Tedious tasks see an upward trend.

4. Human tasks are performed by machines.

Question Number : 15 Question Id : 91394310708 Question Type : MCQ Option Shuffling : Yes Display Question Number : Yes Single Line Question Option : No Option Orientation : Vertical

Correct Marks : 2 Wrong Marks : 0

The crux of the passage contains the following statements :

(a) Digital technology is dangerous.

(b) Those who own information will own the future.

(c) Artificial intelligence will do the human tasks.

(d) Monopoly of digital technology has led to unequal ownership of information.

(e) Intellectual property rights should be protected in an open world.

Code :

Options :

1. (a), (b) and (c)

2. (b), (c) and (d)

3. (c), (d) and (e)

4. (d), (e) and (a)

NTA UGC NET YANI NIMI G NET

Question Id : 91394310703 Question Type : COMPREHENSION Sub Question Shuffling Allowed : Yes Group Comprehension Questions : No

Question Numbers : (11 to 15)

Question Label : Comprehension

नीचे दिए गए परिच्छेद को सावधानीपूर्वक पढ़ें और प्रश्न 11 से 15 तक के उत्तर दें :

आज के डिजिटल युग में, जो सूचना का स्वामी है वही भविष्य का स्वामी होगा। इस डिजिटल दुनिया में हमें मुक्त और निर्मुक्त के बीच बुनियादी चयन करना है। एक मुक्त संसार में सभी सूचना को साझा करते हैं – यानि यह सबके लिए मुक्त रूप से उपलब्ध होती है। एक संवृत संसार में सूचना पर कुछेक का अनन्य रूप से स्वामित्व और नियंत्रण होता है। आज हम एक संवृत दुनिया में निवास करते हैं। इस दुनिया में धन और शक्ति का असाधारण रूप से और सतत केंद्रीकरण हो रहा है। एक दुनिया जहाँ नवाचार को अतिशय एकाधिकार द्वारा हतोत्साहित और विकृत किया जाता है; जहाँ आवश्यक दवायें सिर्फ अमीरों की पहुँच में हैं; जहाँ स्वतंत्रता के छल–साधन, बहिष्करण और शोषण के कारण खतरे में पड़ जाती हैं; और आपके द्वारा किये गये हर क्लिक, उठाये गये हर कदम की वे निगरानी कर रहे हैं। इसके विपरीत, एक मुक्त दुनिया में हम सब हर चीज, जैसे सांख्यिकी और शोध से लेकर समाचार पत्र की रपटें और किताबें, सॉफ्टवेयर और फिल्म से ले कर संगीत और चिकित्सीय सूत्र, के प्रयोग, उपयोग और संवर्धन की आजादी से लाभान्वित होंगे। एक मुक्त दुनिया में हम नवाचारकों और सर्जकों को बौद्धिक संपदा एकाधिकारों की बजाये बाजार चालित पारितोषिक अधिकारों के आधार पर ज्यादा से ज्यादा उचित भुगतान करेंगे। डिजिटल तकनीकों में सुधार के साथ आज वे कार निर्माण से लेकर मुलाकात का समय तय करने तक मानव द्वारा किए जाने वाले ज्यादा से ज्यादा काम निपटा रही हैं। और आने वाले कुछ दशकों में, कृत्रिम प्रज्ञा न सिर्फ हमारे लिए कार चला रही हो सकती है बल्कि संभव है कि वह विधिक अनुबंध तैयार करने और शल्य चिकित्सा का काम भी करने लगे। प्रकटतः, यदि मशीन हमारे दैनंदिन के जटिल कार्यों को ज्यादा कुशलता से करने लग जाए तो इससे हमें काफी फायदा होगा। हालांकि इसमें खतरा यह है कि रोबोट सूचना–सॉफ्टवेयर, आंकड़ा कलन–विधि के आधार पर चालित होते हैं और फिलहाल इस प्रकार की सूचना का स्वामित्व असमान है। और चूंकि यह हमारे संवृत बौद्धिक संपदा अधिकार तंत्र द्वारा संरक्षित है।

Sub questions

Question Number : 11 Question Id : 91394310704 Question Type : MCQ Option Shuffling : Yes Display Question Number : Yes Single Line Question Option : No Option Orientation : Vertical

Correct Marks : 2 Wrong Marks : 0

एक मुक्त दुनिया कैसे कार्य करेगी?

Options :

1. सीमित विकल्पों के साथ

2. सूचना सबको उपलब्ध होगी

3. सूचना विशिष्ट लोगों के पास होगी

4. सूचना नियंत्रित होगी

Question Number : 12 Question Id : 91394310705 Question Type : MCQ Option Shuffling : Yes Display Question Number : Yes Single Line Question Option : No Option Orientation : Vertical

Correct Marks : 2 Wrong Marks : 0

ITA UGC NET YANI NIMC NET

एक संवृत दुनिया की क्या विशेषतायें हैं?

(a) शक्ति और धन का केंद्रीकरण।

(b) नवाचार नियंत्रित होता है।

(c) दवायें सिर्फ अमीरों की पहुँच में होती हैं।

(d) स्वतंत्रता छल-साधित होती हैं।

(e) सब लोग सूचना साझा करते हैं।

(f) रचनात्मकता की स्वीकृति होती है।

कूट :

Options :

1. (a), (b), (c) और (d)

2. (b), (c), (d) और (e)

3. (c), (d), (e) और (f)

4. (d), (e), (f) और (a)

Question Number : 13 Question Id : 91394310706 Question Type : MCQ Option Shuffling : Yes Display Question Number : Yes Single Line Question Option : No Option Orientation : Vertical

Correct Marks : 2 Wrong Marks : 0

एक मुक्त दुनिया में बौद्धिक संपदा अधिकारों की क्या स्थिति है?

Options :

1. वे एकाधिकारात्मक अधिकार होते हैं

2. चिकित्सीय सूत्र तक सीमित पहुँच होती है

3. पारितोषिक अधिकारों द्वारा प्रतिस्थापित

4. संरक्षित स्वामित्व अधिकार

Question Number : 14 Question Id : 91394310707 Question Type : MCQ Option Shuffling : Yes Display Question Number : Yes Single Line Question Option : No Option Orientation : Vertical

Correct Marks : 2 Wrong Marks : 0

NTA UGC NET YANI NIMI G NET

वर्तमान विश्व पर डिजिटल तकनीकों का क्या प्रभाव है?

Options :

1. रचनात्मकता उपेक्षित होती है।

2. यांत्रिक शुद्धता विकृत होती है।

3. जटिल कार्यों में बढ़ोत्तरी दिखती है।

4. मशीन मानवीय कार्य संपादित करते हैं।

Question Number : 15 Question Id : 91394310708 Question Type : MCQ Option Shuffling : Yes Display Question Number : Yes Single Line Question Option : No Option Orientation : Vertical

Correct Marks : 2 Wrong Marks : 0

परिच्छेद के सार में निम्न कथन शमिल हैं :

(a) डिजिटल तकनीक खतरनाक है।

(b) जो सूचना के स्वामी हैं, वही भविष्य के स्वामी होंगे।

(c) कृत्रिम प्रज्ञा मानवीय कार्य संपादित करेगी।

(d) डिजिटल तकनीक के एकाधिकार से सूचना का असमान स्वामित्व उत्पन्न हुआ है।

(e) एक मुक्त संसार में बौद्धिक संपदा अधिकारों का संरक्षण होना चाहिए।

कूट :

Options :

1. (a), (b) और (c)

2. (b), (c) और (d)

3. (c), (d) और (e)

4. (d), (e) और (a)

NTA UGC NET YANI NIMI G NET

Sub-Section Number: 3

Sub-Section Id: 913943543

Question Shuffling Allowed : Yes

Question Number : 16 Question Id : 91394310709 Question Type : MCQ Option Shuffling : Yes Display Question Number : Yes Single Line Question Option : No Option Orientation : Vertical

Correct Marks : 2 Wrong Marks : 0

In verbal communication, words act as :

Options :

1. Fillers

2. Decoratives

3. Symbols

4. Passive barriers

Question Number : 16 Question Id : 91394310709 Question Type : MCQ Option Shuffling : Yes Display Question Number : Yes Single Line Question Option : No Option Orientation : Vertical

Correct Marks : 2 Wrong Marks : 0

मौखिक संप्रेषण में शब्द निम्नांकित में से किसका कार्य करते हैं?

Options :

1. रिक्त स्थान पूरक

2. अलंकारिक

3. संकेतक

4. निष्क्रिय अवरोधक

NTA UGC NET YANI NIMI G NET

Question Number : 17 Question Id : 91394310710 Question Type : MCQ Option Shuffling : Yes Display Question Number : Yes Single Line Question Option : No Option Orientation : Vertical

Correct Marks : 2 Wrong Marks : 0

Modern educational communication is described as :

Options :

1. Teleologic

2. Non-distributive

3. Un-approximate

4. Telescopic

Question Number : 17 Question Id : 91394310710 Question Type : MCQ Option Shuffling : Yes Display Question Number : Yes Single Line Question Option : No Option Orientation : Vertical

Correct Marks : 2 Wrong Marks : 0

आधुनिक शैक्षिक संप्रेषण को किस रूप में वर्णित किया जाता है?

Options :

1. प्रयोजनमूलक

2. गैर-वितरणात्मक

3. अपरिमेय

4. दूरदर्शात्मक

Question Number : 18 Question Id : 91394310711 Question Type : MCQ Option Shuffling : Yes Display Question Number : Yes Single Line Question Option : No Option Orientation : Vertical

Correct Marks : 2 Wrong Marks : 0

Effective classroom communication would help students internalise :

(a) Knowledge (b) Subject matter

(c) Articulation (d) Language felicity

(e) Non-responsiveness (f) Modalities of resistance

Code :

Options :

1. (a), (b), (c) and (d)

2. (b), (c), (d) and (e)

3. (c), (d), (e) and (f)

4. (a), (d), (e) and (f)

NTA UGC NET YANI NIMI G NET

Question Number : 18 Question Id : 91394310711 Question Type : MCQ Option Shuffling : Yes Display Question Number : Yes Single Line Question Option : No Option Orientation : Vertical

Correct Marks : 2 Wrong Marks : 0

प्रभावी कक्षागत संप्रेषण से छात्र क्या आत्मसात कर सकते हैं?

(a) ज्ञान
(b) विषय वस्तु
(c) अभिव्यक्ति
(d) भाषा प्रवीणता
(e) निष्क्रियता
(f) प्रतिरोध के स्वरूप

कूट :

Options :

1. (a), (b), (c) और (d)
2. (b), (c), (d) और (e)
3. (c), (d), (e) और (f)
4. (a), (d), (e) और (f)

Question Number : 19 Question Id : 91394310712 Question Type : MCQ Option Shuffling : Yes Display Question Number : Yes Single Line Question Option : No Option Orientation : Vertical

Correct Marks : 2 Wrong Marks : 0

The challenging behaviours of students as related to communication are :

(a) purposive challenges
(b) critical challenges
(c) procedural challenges
(d) evaluation challenges
(e) practicality challenges
(f) power challenges

Code :

Options :

1. (a), (b), (c) and (d)
2. (b), (c), (d) and (f)
3. (c), (d), (e) and (f)
4. (d), (e), (f) and (a)

Question Number : 19 Question Id : 91394310712 Question Type : MCQ Option Shuffling : Yes Display Question Number : Yes Single Line Question Option : No Option Orientation : Vertical

Correct Marks : 2 Wrong Marks : 0

NTA UGC NET YANI NIMI G NET

संप्रेषण से जुड़े छात्रों के चुनौतीपूर्ण व्यवहार हैं :

(a) उद्देश्यपरक चुनौतियां
(b) महत्त्वपूर्ण चुनौतियां
(c) प्रक्रियात्मक चुनौतियां
(d) मूल्यांकन चुनौतियां
(e) व्यावहारिकता संबंधी चुनौतियां
(f) शक्ति संबंधी चुनौतियां

कूट :

Options :

1. (a), (b), (c) और (d)
2. (b), (c), (d) और (f)
3. (c), (d), (e) और (f)
4. (d), (e), (f) और (a)

Question Number : 20 Question Id : 91394310713 Question Type : MCQ Option Shuffling : Yes Display Question Number : Yes Single Line Question Option : No Option Orientation : Vertical

Correct Marks : 2 Wrong Marks : 0

Classroom communication has a basis in :

Options :

1. Audience fragmentation
2. Non-informative cues
3. Attention diversion
4. Intensive listener focus

NTA UGC NET YANI NIMI G NET

Question Number : 20 Question Id : 91394310713 Question Type : MCQ Option Shuffling : Yes Display Question Number : Yes Single Line Question Option : No Option Orientation : Vertical

Correct Marks : 2 Wrong Marks : 0

कक्षागत संप्रेषण का आधार है :

Options :

1. श्रोता बिखराव

2. गैर-सूचनात्मक संकेत

3. ध्यान विचलन

4. श्रोता का गहन संकेंद्रण

Question Number : 21 Question Id : 91394310714 Question Type : MCQ Option Shuffling : Yes Display Question Number : Yes Single Line Question Option : No Option Orientation : Vertical

Correct Marks : 2 Wrong Marks : 0

If FACE is coded as HCEG, then the code for HIGH will be :

Options :

1. BEFB

2. ZXYZ

3. KHIK

4. JKIJ

NTA UGC NET YANI NIMI G NET

Question Number : 21 Question Id : 91394310714 Question Type : MCQ Option Shuffling : Yes Display Question Number : Yes Single Line Question Option : No Option Orientation : Vertical

Correct Marks : 2 Wrong Marks : 0

यदि FACE को HCEG के रूप में कूटबद्ध किया जाता है, तो HIGH के लिए कूट क्या होगा?

Options :

1. BEFB

2. ZXYZ

3. KHIK

4. JKIJ

Question Number : 22 Question Id : 91394310715 Question Type : MCQ Option Shuffling : Yes Display Question Number : Yes Single Line Question Option : No Option Orientation : Vertical

Correct Marks : 2 Wrong Marks : 0

The next number in the series 12, 15, 21, 33, 57, _____ is :

Options :

1. 95

2. 107

3. 97

4. 105

Question Number : 22 Question Id : 91394310715 Question Type : MCQ Option Shuffling : Yes Display Question Number : Yes Single Line Question Option : No Option Orientation : Vertical

Correct Marks : 2 Wrong Marks : 0

12, 15, 21, 33, 57 की शृंखला में अगला अंक होगा :

Options :

1. 95

2. 107

3. 97

4. 105

Question Number : 23 Question Id : 91394310716 Question Type : MCQ Option Shuffling : Yes Display Question Number : Yes Single Line Question Option : No Option Orientation : Vertical

Correct Marks : 2 Wrong Marks : 0

The next term in the letter series DY, JX, OW, SV, VU, _____ is :

Options :

1. WV

2. XT

3. XS

4. YT

NTA UGC NET YANI NIMI G NET

Question Number : 23 Question Id : 91394310716 Question Type : MCQ Option Shuffling : Yes Display Question Number : Yes Single Line Question Option : No Option Orientation : Vertical

Correct Marks : 2 Wrong Marks : 0

वर्ण शृंखला DY, JX, OW, SV, VU में अगला पद होगा :

Options :

1. WV

2. XT

3. XS

4. YT

Question Number : 24 Question Id : 91394310717 Question Type : MCQ Option Shuffling : Yes Display Question Number : Yes Single Line Question Option : No Option Orientation : Vertical

Correct Marks : 2 Wrong Marks : 0

Which of these words is different from the rest ?

Options :

1. Tall

2. Huge

3. Thin

4. Sharp

Question Number : 24 Question Id : 91394310717 Question Type : MCQ Option Shuffling : Yes Display Question Number : Yes Single Line Question Option : No Option Orientation : Vertical

Correct Marks : 2 Wrong Marks : 0

दिए गए शब्दों में विषम शब्द है :

Options :

1. लंबा

2. विशाल

3. पतला

4. नुकीला

Question Number : 25 Question Id : 91394310718 Question Type : MCQ Option Shuffling : Yes Display Question Number : Yes Single Line Question Option : No Option Orientation : Vertical

Correct Marks : 2 Wrong Marks : 0

NTA UGC NET YANI NIMI G NET

Ram said to Shyam, "That girl playing with the doll, is the younger of the two daughters of my father's wife".

How is the girl playing with the doll is related to Ram ?

Options :

1. Sister

2. Aunty

3. Sister-in-law

4. Cousin

Question Number : 25 Question Id : 91394310718 Question Type : MCQ Option Shuffling : Yes Display Question Number : Yes Single Line Question Option : No Option Orientation : Vertical

Correct Marks : 2 Wrong Marks : 0

राम ने श्याम से कहा, ''वह लड़की जो गुड़ियों से खेल रही है, मेरे पिता की पत्नी की दो पुत्रियों में से छोटी है।''

गुड़ियों के साथ खेलने वाली लड़की राम से कैसे संबंधित है?

Options :

1. बहन

2. आंटी

3. भाभी

4. चचेरी बहन

Question Number : 26 Question Id : 91394310719 Question Type : MCQ Option Shuffling : Yes Display Question Number : Yes Single Line Question Option : No Option Orientation : Vertical

Correct Marks : 2 Wrong Marks : 0

In which of the following instances, deductive argument is invalid ?

Options :

1. When its premises and conclusion are all false.

2. When its premises and conclusion are all true.

3. When its premises are true but conclusion is false.

NTA UGC NET YANI NIMI G NET

4. When its premises are false and conclusion is true.

Question Number : 26 Question Id : 91394310719 Question Type : MCQ Option Shuffling : Yes Display Question Number : Yes Single Line Question Option : No Option Orientation : Vertical

Correct Marks : 2 Wrong Marks : 0

निम्नलिखित में से किस उदाहरण में निगमनात्मक तर्क अवैध है?

Options :

1. जब इसके आधार वाक्य और निष्कर्ष सभी गलत हैं।

2. जब इसके आधार वाक्य और निष्कर्ष सभी सही हैं।

3. जब इसके आधार वाक्य सही है परंतु निष्कर्ष गलत हैं।

4. जब इसके आधार वाक्य गलत हैं परंतु निष्कर्ष सही हैं।

Question Number : 27 Question Id : 91394310720 Question Type : MCQ Option Shuffling : Yes Display Question Number : Yes Single Line Question Option : No Option Orientation : Vertical

Correct Marks : 2 Wrong Marks : 0

The reasoning which would be helpful in seeking new knowledge of facts about the world is :

Options :

1. Demonstrative

2. Deductive

3. Inductive

4. Speculative

NTA UGC NET YANI NIMI G NET

Question Number : 27 Question Id : 91394310720 Question Type : MCQ Option Shuffling : Yes Display Question Number : Yes Single Line Question Option : No Option Orientation : Vertical

Correct Marks : 2 Wrong Marks : 0

विश्व के संबंध में तथ्यों का नया ज्ञान प्राप्त करने में निम्नलिखित में से कौन-सा तर्क सहायक होगा?

Options :

1. प्रदर्शनपरक

2. निगमनात्मक

3. आगमनात्मक

4. अनुमानपरक

Question Number : 28 Question Id : 91394310721 Question Type : MCQ Option Shuffling : Yes Display Question Number : Yes Single Line Question Option : No Option Orientation : Vertical

Correct Marks : 2 Wrong Marks : 0

Given below are two premises with four conclusions drawn from them (taking singly or together). Which of the following conclusions could be validly drawn from the premises ?

Premises : (i) All cats are animals.

(ii) Birds are not cats.

Conclusions : (a) Birds are not animals.

(b) Cats are not Birds.

(c) All animals are cats.

(d) Some animals are cats.

Select the **correct** answer from the code given below :

Code :

Options :

1. (a), (b) and (d)

2. (b) and (d)

3. (a) and (c)

4. (b), (c) and (d)

NTA UGC NET YANI NIMI G NET

Question Number : 28 Question Id : 91394310721 Question Type : MCQ Option Shuffling : Yes Display Question Number : Yes Single Line Question Option : No Option Orientation : Vertical

Correct Marks : 2 Wrong Marks : 0

नीचे दो आधार वाक्यों से निकाले गए निष्कर्षों (एकल या एकसाथ) सहित वे दो आधार दिए गए हैं। निम्नलिखित में से कौन से निष्कर्ष आधार वाक्यों से वैध रूप से निकाले गए हैं?

आधार वाक्य : (i) सभी बिल्लियाँ जानवर हैं।

(ii) पक्षी बिल्लियाँ नहीं हैं।

निष्कर्ष : (a) पक्षी जानवर नहीं हैं।

(b) बिल्लियाँ पक्षी नहीं हैं।

(c) सभी जानवर बिल्लियाँ हैं।

(d) कुछ जानवर बिल्लियाँ हैं।

नीचे दिए गए कूट से **सही** उत्तर का चयन करें :

कूट :

Options :

1. (a), (b) और (d)
2. (b) और (d)
3. (a) और (c)
4. (b), (c) और (d)

Question Number : 29 Question Id : 91394310722 Question Type : MCQ Option Shuffling : Yes Display Question Number : Yes Single Line Question Option : No Option Orientation : Vertical

Correct Marks : 2 Wrong Marks : 0

Inductive argument proceeds from :

Options :

1. Particulars to Particulars
2. Particulars to Universals
3. Universals to Particulars
4. Universals to Universals

NTA UGC NET YANI NIMI G NET

Question Number : 29 Question Id : 91394310722 Question Type : MCQ Option Shuffling : Yes Display Question Number : Yes Single Line Question Option : No Option Orientation : Vertical

Correct Marks : 2 Wrong Marks : 0

आगमनात्मक तर्क की ओर उन्मुख होता है :

Options :

1. विशेष से विशेष

2. विशेष से व्यापक

3. व्यापक से विशेष

4. व्यापक से व्यापक

Question Number : 30 Question Id : 91394310723 Question Type : MCQ Option Shuffling : Yes Display Question Number : Yes Single Line Question Option : No Option Orientation : Vertical

Correct Marks : 2 Wrong Marks : 0

Among the following statements, two are contradictory to each other.

Statements :

(a) All men are humans.

(b) Some men are humans.

(c) Some men are not humans.

(d) No men are humans.

Select the code that represents them :

Code :

Options :

1. (a) and (b)

2. (a) and (d)

3. (a) and (c)

4. (b) and (c)

NTA UGC NET YANI NIMI C NET

Question Number : 30 Question Id : 91394310723 Question Type : MCQ Option Shuffling : Yes Display Question Number : Yes Single Line Question Option : No Option Orientation : Vertical

Correct Marks : 2 Wrong Marks : 0

निम्नलिखित दो कथन एक दूसरे के विरोधी हैं।

कथन :

(a) सभी पुरुष मानव हैं।

(b) कुछ पुरुष मानव हैं।

(c) कुछ पुरुष मानव नहीं हैं।

(d) कोई पुरुष मानव नहीं हैं।

उस कूट का चयन करें जो उनका प्रतिनिधित्व करता है :

कूट :

Options :

1. (a) और (b)

2. (a) और (d)

3. (a) और (c)

4. (b) और (c)

NTA UGC NET YANI NIMI G NET

Sub-Section Number:	4
Sub-Section Id:	913943544
Question Shuffling Allowed :	Yes

Question Id : 91394310724 Question Type : COMPREHENSION Sub Question Shuffling Allowed : Yes Group Comprehension Questions : No

Question Numbers : (31 to 35)

Question Label : Comprehension

Subject	Total number of students appeared	Number of students who passed	Number of students who failed	Maximum/ Full marks in the subject
English	600	-	36	600
Mathematics	-	240	60	-
Science	300	216	-	400
Social Studies	360	-	48	400
Computer	-	168	32	400

Study the table given above carefully. It shows the number of students appeared, passed and failed in five subjects. The full marks in each subject is also given.

Some of the cells have missing data. You might need to determine some of the missing data to answer the questions below.

Sub questions

Question Number : 31 Question Id : 91394310725 Question Type : MCQ Option Shuffling : Yes Display Question Number : Yes Single Line Question Option : No Option Orientation : Vertical

Correct Marks : 2 Wrong Marks : 0

Which of the following could be the full marks in Mathematics if the pass marks in Mathematics was 35% and the person who just passed scored 70 ?

Options :

1. 400

2. 500

3. 600

4. 200

Question Number : 32 Question Id : 91394310726 Question Type : MCQ Option Shuffling : Yes Display Question Number : Yes Single Line Question Option : No Option Orientation : Vertical

Correct Marks : 2 Wrong Marks : 0

What is the maximum marks that a student can score in all the five subjects together ? (You may use the answer of the previous question.)

Options :

1. 500

2. 1000

3. 1500

NTA UGC NET YAMI NIMI G NET

4. 2000

Question Number : 33 Question Id : 91394310727 Question Type : MCQ Option Shuffling : Yes Display Question Number : Yes Single Line Question Option : No Option Orientation : Vertical

Correct Marks : 2 Wrong Marks : 0

What is the difference between the number of failed students in Science and the number of passed in Social Studies ?

Options :

1. 228

2. 238

3. 312

4. 218

Question Number : 34 Question Id : 91394310728 Question Type : MCQ Option Shuffling : Yes Display Question Number : Yes Single Line Question Option : No Option Orientation : Vertical

Correct Marks : 2 Wrong Marks : 0

What is the approximate difference in percentage between the pass % in Social Studies and the pass % in Mathematics ?

Options :

1. 2.5%

2. 6.5%

3. 16.5%

4. 26.5%

NTA UGC NET YANI NIMI G NET

Question Number : 35 Question Id : 91394310729 Question Type : MCQ Option Shuffling : Yes Display Question Number : Yes Single Line Question Option : No Option Orientation : Vertical

Correct Marks : 2 Wrong Marks : 0

In which subject, was the failure percent the least ?

Options :

1. English

2. Mathematics

3. Science

4. Social Studies

Question Id : 91394310724 Question Type : COMPREHENSION Sub Question Shuffling Allowed : Yes Group Comprehension Questions : No

Question Numbers : (31 to 35)

Question Label : Comprehension

विषय	परीक्षा देनेवाले विद्यार्थियों की कुल संख्या	उत्तीर्ण होनेवाले विद्यार्थियों की संख्या	अनुत्तीर्ण छात्रों की संख्या	विषय में अधिकतम अंक
अंग्रेजी	600	-	36	600
गणित	-	240	60	-
विज्ञान	300	216	-	400
समाज अध्ययन	360	-	48	400
कंप्यूटर	-	168	32	400

उपर्युक्त तालिका को ध्यानपूर्वक पढ़िए। इसमें पाँच विषयों की परीक्षा देनेवाले, उसमें उत्तीर्ण और अनुत्तीर्ण होनेवाले विद्यार्थियों को दर्शाया गया है। प्रत्येक विषय के कुल अंक भी दिए गए हैं।

कुछ कोष्ठकों में आंकड़े नहीं हैं। नीचे दिए गए प्रश्नों के उत्तर देने के क्रम में आपको अनुपलब्ध आँकड़ों का अवधारण करना पड़ सकता है।

Sub questions

Question Number : 31 Question Id : 91394310725 Question Type : MCQ Option Shuffling : Yes Display Question Number : Yes Single Line Question Option : No Option Orientation : Vertical

Correct Marks : 2 Wrong Marks : 0

यदि गणित का उत्तीर्णांक 35% था और ऐसे व्यक्ति को जो गणित में केवल उत्तीर्ण हुए प्राप्तांक 70 था तो गणित का पूर्णांक क्या था?

Options :

1. 400

2. 500

3. 600

4. 200

NTA UGC NET YANI NIMI G NET

Question Number : 32 Question Id : 91394310726 Question Type : MCQ Option Shuffling : Yes Display Question Number : Yes Single Line Question Option : No Option Orientation : Vertical

Correct Marks : 2 Wrong Marks : 0

सभी पाँच विषयों में विद्यार्थी अधिकतम कितने अंक प्राप्त कर सकते हैं? (आप पिछले प्रश्न के उत्तर का उपयोग कर सकते हैं।)

Options :

1. 500

2. 1000

3. 1500

4. 2000

Question Number : 33 Question Id : 91394310727 Question Type : MCQ Option Shuffling : Yes Display Question Number : Yes Single Line Question Option : No Option Orientation : Vertical

Correct Marks : 2 Wrong Marks : 0

विज्ञान में अनुत्तीर्ण और समाज अध्ययन में उत्तीर्ण होनेवाले विद्यार्थियों में कितना अंतर है?

Options :

1. 228

2. 238

3. 312

4. 218

Question Number : 34 Question Id : 91394310728 Question Type : MCQ Option Shuffling : Yes Display Question Number : Yes Single Line Question Option : No Option Orientation : Vertical

Correct Marks : 2 Wrong Marks : 0

समाज अध्ययन और गणित में उत्तीर्णता प्रतिशत में लगभग कितने प्रतिशत का अंतर है?

Options :

1. 2.5%

2. 6.5%

3. 16.5%

NTA UGC NET YANI NIMI G NET

4. 26.5%

Question Number : 35 Question Id : 91394310729 Question Type : MCQ Option Shuffling : Yes Display Question Number : Yes Single Line Question Option : No Option Orientation : Vertical

Correct Marks : 2 Wrong Marks : 0

किस विषय में अनुत्तीर्ण होने का प्रतिशत सबसे कम था?

Options :

1. अंग्रेजी

2. गणित

3. विज्ञान

4. समाज अध्ययन

Sub-Section Number:	5
Sub-Section Id:	913943545
Question Shuffling Allowed :	Yes

Question Number : 36 Question Id : 91394310730 Question Type : MCQ Option Shuffling : Yes Display Question Number : Yes Single Line Question Option : No Option Orientation : Vertical

Correct Marks : 2 Wrong Marks : 0

Full form of PDF is :

Options :

1. Portable Document Format

2. Portable Data Format

3. Portable Document Form

4. Portable Data Form

Question Number : 36 Question Id : 91394310730 Question Type : MCQ Option Shuffling : Yes Display Question Number : Yes Single Line Question Option : No Option Orientation : Vertical

Correct Marks : 2 Wrong Marks : 0

पी.डी.एफ. का पूर्ण रूप है :

Options :

NTA UGC NET YANI NIMI G NET

1. पोर्टेबल डॉक्यूमेंट फॉर्मेट

2. पोर्टेबल डेटा फॉर्मेट

3. पोर्टेबल डॉक्यूमेंट फॉर्म

4. पोर्टेबल डेटा फॉर्म

Question Number : 37 Question Id : 91394310731 Question Type : MCQ Option Shuffling : Yes Display Question Number : Yes Single Line Question Option : No Option Orientation : Vertical

Correct Marks : 2 Wrong Marks : 0

A Terabyte is equal to :

Options :

1. 1024 Megabytes

2. 1024 Gigabytes

3. 1024 × 1024 Kilobytes

4. 1024 Kilobytes

NTA UGC NET YANI NIMI G NET

Question Number : 37 Question Id : 91394310731 Question Type : MCQ Option Shuffling : Yes Display Question Number : Yes Single Line Question Option : No Option Orientation : Vertical

Correct Marks : 2 Wrong Marks : 0

एक टेराबाइट किसके बराबर है?

Options :

1. 1024 मेगाबाइट्स

2. 1024 गीगाबाइट्स

3. 1024 × 1024 किलोबाइट्स

4. 1024 किलोबाइट्स

Question Number : 38 Question Id : 91394310732 Question Type : MCQ Option Shuffling : Yes Display Question Number : Yes Single Line Question Option : No Option Orientation : Vertical

Correct Marks : 2 Wrong Marks : 0

The binary equivalent of $(-23)_{10}$ is (2's complement system for negative numbers is used) :

Options :

1. 10111

2. 01001

3. 01010

4. 01000

Question Number : 38 Question Id : 91394310732 Question Type : MCQ Option Shuffling : Yes Display Question Number : Yes Single Line Question Option : No Option Orientation : Vertical

Correct Marks : 2 Wrong Marks : 0

$(-23)_{10}$ का युग्म समतुल्य (बाइनरी इक्विवेलेंट) है (2's कंप्लीमेंट प्रणाली का प्रयोग ऋणात्मक संख्याओं के लिए किया गया है) :

Options :

1. 10111

2. 01001

3. 01010

4. 01000

Question Number : 39 Question Id : 91394310733 Question Type : MCQ Option Shuffling : Yes Display Question Number : Yes Single Line Question Option : No Option Orientation : Vertical

Correct Marks : 2 Wrong Marks : 0

DNS stands for :

Options :

1. Domain Name Standard

2. Domain Name System

3. Distributed Name System

4. Dynamic Name Standard

NTA UGC NET YANI NIMLG NET

Question Number : 39 Question Id : 91394310733 Question Type : MCQ Option Shuffling : Yes Display Question Number : Yes Single Line Question Option : No Option Orientation : Vertical

Correct Marks : 2 Wrong Marks : 0

डी.एन.एस. का अर्थ है :

Options :

1. डोमेन नेम स्टैंडर्ड

2. डोमेन नेम सिस्टम

3. डिस्ट्रीब्यूटेड नेम सिस्टम

4. डायनेमिक नेम स्टैंडर्ड

Question Number : 40 Question Id : 91394310734 Question Type : MCQ Option Shuffling : Yes Display Question Number : Yes Single Line Question Option : No Option Orientation : Vertical

Correct Marks : 2 Wrong Marks : 0

Which of the given statements are **true** ?

(a) Modem is a Networking device.

(b) Modem is a Voltage stabilizer.

(c) Modem converts analogue signal to digital signal and vice-versa.

Code :

Options :

1. (a) and (b)

2. (b) and (c)

3. (a) and (c)

4. (a), (b) and (c)

NTA UGC NET YANI NIMI G NET

Question Number : 40 Question Id : 91394310734 Question Type : MCQ Option Shuffling : Yes Display Question Number : Yes Single Line Question Option : No Option Orientation : Vertical

Correct Marks : 2 Wrong Marks : 0

निम्नांकित में से कौन-से कथन **सही** हैं?

(a) मोडेम एक नेटवर्किंग युक्ति है।

(b) मोडेम एक वोल्टेज स्टेबिलाइजर है।

(c) मोडेम एनालॉग संकेत को डिजिटल संकेत में और डिजिटल संकेत को एनालॉग संकेत में बदलता है।

कूट :

Options :

1. (a) और (b)

2. (b) और (c)

3. (a) और (c)

4. (a), (b) और (c)

Question Number : 41 Question Id : 91394310735 Question Type : MCQ Option Shuffling : Yes Display Question Number : Yes Single Line Question Option : No Option Orientation : Vertical

Correct Marks : 2 Wrong Marks : 0

Which among the following industries, consumes maximum water in India ?

Options :

1. Engineering

2. Textiles

3. Thermal power plants

4. Paper and pulp

NTA UGC NET YANI NIMI G NET

Question Number : 41 Question Id : 91394310735 Question Type : MCQ Option Shuffling : Yes Display Question Number : Yes Single Line Question Option : No Option Orientation : Vertical

Correct Marks : 2 Wrong Marks : 0

भारत में निम्नलिखित में से किस उद्योग में जल की अधिकतम खपत होती है?

Options :

1. इंजीनियरिंग

2. वस्त्र

3. ताप विद्युत संयंत्र

4. कागज और लुग्दी

Question Number : 42 Question Id : 91394310736 Question Type : MCQ Option Shuffling : Yes Display Question Number : Yes Single Line Question Option : No Option Orientation : Vertical

Correct Marks : 2 Wrong Marks : 0

Plants suitable for biomonitoring of Sulphur Dioxide pollution are :

Options :

1. White pine, moss and lichens

2. Tomato and lettuce

3. Tobacco, grapes and garden bean

4. Apricot, peach and gladiolus

NTA UGC NET YANI NIMI G NET

Question Number : 42 Question Id : 91394310736 Question Type : MCQ Option Shuffling : Yes Display Question Number : Yes Single Line Question Option : No Option Orientation : Vertical

Correct Marks : 2 Wrong Marks : 0

सल्फर डाइऑक्साइड प्रदूषण की जैव-निगरानी के लिए उपयुक्त पादप हैं :

Options :

1. श्वेत देवदार, काई और शैवाक

2. टमाटर और पत्तेदार सब्जी

3. तम्बाकू, अंगूर और बाग सेम

4. एप्रिकॉट (अखरोट), आड़ू और ग्लेडिओलस

Question Number : 43 Question Id : 91394310737 Question Type : MCQ Option Shuffling : Yes Display Question Number : Yes Single Line Question Option : No Option Orientation : Vertical

Correct Marks : 2 Wrong Marks : 0

An earthquake is rated as 'major' if its magnitude in Richter Scale is in the range of :

Options :

1. 4.0 - 4.9

2. 5.0 - 5.9

3. 6.0 - 6.9

4. 7.0 - 7.9

Question Number : 43 Question Id : 91394310737 Question Type : MCQ Option Shuffling : Yes Display Question Number : Yes Single Line Question Option : No Option Orientation : Vertical

Correct Marks : 2 Wrong Marks : 0

भूकंप को 'बड़ा' भूकंप होने की संज्ञा दी जाती है यदि रिक्टर पैमाने पर इसका प्रभाव निम्न क्षेत्र में होता है :

Options :

1. 4.0 से 4.9

2. 5.0 से 5.9

3. 6.0 से 6.9

4. 7.0 से 7.9

Question Number : 44 Question Id : 91394310738 Question Type : MCQ Option Shuffling : Yes Display Question Number : Yes Single Line Question Option : No Option Orientation : Vertical

Correct Marks : 2 Wrong Marks : 0

The biggest hindrance in using biomass as a major energy source is :

Options :

1. Technology not well developed for commercialisation.

2. Energy yield of low level.

3. Large amount of land required to grow energy crops.

4. Air pollution due to combustion.

Question Number : 44 Question Id : 91394310738 Question Type : MCQ Option Shuffling : Yes Display Question Number : Yes Single Line Question Option : No Option Orientation : Vertical

Correct Marks : 2 Wrong Marks : 0

NTA UGC NET YANI NIMI G NET

बायोमास को एक प्रमुख ऊर्जा स्रोत के रूप में प्रयोग करने में सबसे बड़ी बाधा है :

Options :

1. वाणिज्यीकरण के लिए प्रौद्योगिकी सुविकसित नहीं है।

2. न्यून स्तर की ऊर्जा उत्पन्न होती है।

3. ऊर्जा-फसल उगाने के लिए बहुत अधिक भूमि की आवश्यकता पड़ती है।

4. दहन के कारण वायु प्रदूषण होता है।

Question Number : 45 Question Id : 91394310739 Question Type : MCQ Option Shuffling : Yes Display Question Number : Yes Single Line Question Option : No Option Orientation : Vertical

Correct Marks : 2 Wrong Marks : 0

Assertion (A) : Climate change is going to increase social tension in India.

Reason (R) : The frequency and intensity of the extreme weather events will have serious consequences for food security.

Code :

Options :

1. Both **(A)** and **(R)** are true and **(R)** is the correct explanation of **(A)**.

2. Both **(A)** and **(R)** are true and **(R)** is not the correct explanation of **(A)**.

3. **(A)** is true, but **(R)** is false.

4. **(A)** is false, but **(R)** is true.

NTA UGC NET YANI NIMI C NET

Question Number : 45 Question Id : 91394310739 Question Type : MCQ Option Shuffling : Yes Display Question Number : Yes Single Line Question Option : No Option Orientation : Vertical

Correct Marks : 2 Wrong Marks : 0

अभिकथन (A) : जलवायु परिवर्तन भारत में सामाजिक तनाव बढ़ायेगा।

कारण (R) : मौसम की चरम स्थिति की आवृत्ति और तीव्रता का खाद्य सुरक्षा पर गंभीर प्रभाव पड़ेगा।

कूट :

Options :

1. **(A)** और **(R)** दोनों सही हैं और **(R)**, **(A)** की सही व्याख्या है।

2. **(A)** और **(R)** दोनों सही हैं और **(R)**, **(A)** की सही व्याख्या नहीं है।

3. (A) सही है, किन्तु (R) गलत है।

4. (A) गलत है, किन्तु (R) सही है।

Question Number : 46 Question Id : 91394310740 Question Type : MCQ Option Shuffling : Yes Display Question Number : Yes Single Line Question Option : No Option Orientation : Vertical

Correct Marks : 2 Wrong Marks : 0

The first Open University established in India is :

Options :

1. Yashwantrao Chavan Maharashtra Open University, Nasik

2. Nalanda Open University, Patna

3. Bhim Rao Ambedkar Open University, Hyderabad

4. Tamil Nadu Open University, Chennai

Question Number : 46 Question Id : 91394310740 Question Type : MCQ Option Shuffling : Yes Display Question Number : Yes Single Line Question Option : No Option Orientation : Vertical

Correct Marks : 2 Wrong Marks : 0

भारत में स्थापित पहला मुक्त विश्वविद्यालय है :

Options :

1. यशवंतराव चव्हाण महाराष्ट्र मुक्त विश्वविद्यालय, नासिक

2. नालंदा मुक्त विश्वविद्यालय, पटना

3. भीम राव अंबेडकर मुक्त विश्वविद्यालय, हैदराबाद

4. तमिलनाडु मुक्त विश्वविद्यालय, चेन्नै

Question Number : 47 Question Id : 91394310741 Question Type : MCQ Option Shuffling : Yes Display Question Number : Yes Single Line Question Option : No Option Orientation : Vertical

Correct Marks : 2 Wrong Marks : 0

In 1948, under whose Chairmanship a University Education Commission was set up to reconstruct University Education in India ?

Options :

NTA UGC NET YANI NIMI G NET

1. Sardar Vallabh Bhai Patel

2. Prof. P.C. Joshi

3. Dr. S. Radhakrishnan

4. Dr. Vikram Sarabhai

Question Number : 47 Question Id : 91394310741 Question Type : MCQ Option Shuffling : Yes Display Question Number : Yes Single Line Question Option : No Option Orientation : Vertical

Correct Marks : 2 Wrong Marks : 0

वर्ष 1948 में भारत में विश्वविद्यालय शिक्षा की पुनर्संरचना के लिए किसकी अध्यक्षता में एक विश्वविद्यालय शिक्षा आयोग बनाया गया था?

Options :

1. सरदार वल्लभ भाई पटेल

2. प्रो. पी.सी. जोशी

3. डॉ. एस. राधाकृष्णन

4. डॉ. विक्रम साराभाई

Question Number : 48 Question Id : 91394310742 Question Type : MCQ Option Shuffling : Yes Display Question Number : Yes Single Line Question Option : No Option Orientation : Vertical

Correct Marks : 2 Wrong Marks : 0

University and University-level institutions are categorised into :

(a) Central Universities (b) State Universities

(c) Private Universities (d) Deemed-to-be Universities

(e) Institutions of Higher Learning (f) Civil Sector Institutions

Code :

Options :

1. (a), (c), (e) and (f)

2. (b), (d), (e) and (f)

3. (a), (b), (c) and (d)

NTA UGC NET YANI NIMI G NET

4. (c), (d), (e) and (f)

Question Number : 48 Question Id : 91394310742 Question Type : MCQ Option Shuffling : Yes Display Question Number : Yes Single Line Question Option : No Option Orientation : Vertical

Correct Marks : 2 Wrong Marks : 0

विश्वविद्यालय और विश्वविद्यालय स्तर के संस्थानों को निम्नांकित में से किस श्रेणी में रखा जाता है?

(a) केंद्रीय विश्वविद्यालय
(b) राज्य विश्वविद्यालय
(c) निजी विश्वविद्यालय
(d) मानित विश्वविद्यालय
(e) उच्चतर शिक्षा संस्थान
(f) सिविल क्षेत्र संस्थान

कूट :

Options :

1. (a), (c), (e) और (f)
2. (b), (d), (e) और (f)
3. (a), (b), (c) और (d)
4. (c), (d), (e) और (f)

Question Number : 49 Question Id : 91394310743 Question Type : MCQ Option Shuffling : Yes Display Question Number : Yes Single Line Question Option : No Option Orientation : Vertical

Correct Marks : 2 Wrong Marks : 0

"e-Pathshala" is an initiative by :

Options :

1. UGC
2. CBSE
3. NCERT
4. NCTE

Question Number : 49 Question Id : 91394310743 Question Type : MCQ Option Shuffling : Yes Display Question Number : Yes Single Line Question Option : No Option Orientation : Vertical

Correct Marks : 2 Wrong Marks : 0

''ई–पाठशाला'' किसकी पहल है?

NTA UGC NET YANI NIMI G NET

Options :

1. यू.जी.सी. (UGC)

2. सी.बी.एस.ई. (CBSE)

3. एन.सी.ई.आर.टी. (NCERT)

4. एन.सी.टी.ई. (NCTE)

Question Number : 50 Question Id : 91394310744 Question Type : MCQ Option Shuffling : Yes Display Question Number : Yes Single Line Question Option : No Option Orientation : Vertical

Correct Marks : 2 Wrong Marks : 0

The Council of Rural Institutes Authority is situated at :

Options :

1. Ludhiana

2. Ahmedabad

3. Pune

4. Hyderabad

Question Number : 50 Question Id : 91394310744 Question Type : MCQ Option Shuffling : Yes Display Question Number : Yes Single Line Question Option : No Option Orientation : Vertical

Correct Marks : 2 Wrong Marks : 0

ग्रामीण संस्था प्राधिकरण परिषद कहाँ स्थित है?

Options :

1. लुधियाना

2. अहमदाबाद

3. पुणे

4. हैदराबाद

NTA UGC NET YANI NIMI G NET

Paper II

Group Number :	2
Group Id :	913943142
Group Maximum Duration :	120
Group Minimum Duration :	120
Revisit allowed for view? :	No
Revisit allowed for edit? :	No
Break time:	0
Group Marks:	200

87 Computer Science and Applications

Section Id :	913943142
Section Number :	1
Section type :	Online
Mandatory or Optional:	Mandatory
Number of Questions:	100
Number of Questions to be attempted:	100
Section Marks:	200
Display Number Panel:	Yes
Group All Questions:	No

Sub-Section Number:	1
Sub-Section Id:	913943546
Question Shuffling Allowed :	Yes

Question Number : 51 Question Id : 91394310745 Question Type : MCQ Option Shuffling : Yes Display Question Number : Yes Single Line Question Option : No Option Orientation : Vertical

Correct Marks : 2 Wrong Marks : 0

In mathematical logic, which of the following are statements ?

(i) There will be snow in January.

(ii) What is the time now ?

(iii) Today is Sunday.

(iv) You must study Discrete Mathematics.

Choose the correct answer from the code given below :

Code :

Options :

1. (i) and (iii)

2. (i) and (ii)

3. (ii) and (iv)

4. (iii) and (iv)

NTA UGC NET YANI NIMI G NET

Question Number : 51 Question Id : 91394310745 Question Type : MCQ Option Shuffling : Yes Display Question Number : Yes Single Line Question Option : No Option Orientation : Vertical

Correct Marks : 2 Wrong Marks : 0

In mathematical logic, which of the following are statements ?

(i) There will be snow in January.

(ii) What is the time now ?

(iii) Today is Sunday.

(iv) You must study Discrete Mathematics.

Choose the correct answer from the code given below :

Code :

Options :

1. (i) and (iii)

2. (i) and (ii)

3. (ii) and (iv)

4. (iii) and (iv)

Question Number : 52 Question Id : 91394310746 Question Type : MCQ Option Shuffling : Yes Display Question Number : Yes Single Line Question Option : No Option Orientation : Vertical

Correct Marks : 2 Wrong Marks : 0

Match List I with List II and choose the correct answer from the code given below.

	List I		List II
(a)	Equivalence	(i)	$p \Rightarrow q$
(b)	Contrapositive	(ii)	$p \Rightarrow q : q \Rightarrow p$
(c)	Converse	(iii)	$p \Rightarrow q : \sim q \Rightarrow \sim p$
(d)	Implication	(iv)	$p \Leftrightarrow q$

Code :

Options :

1. (a)–(i), (b)–(ii), (c)–(iii), (d)–(iv)

2. (a)–(ii), (b)–(i), (c)–(iii), (d)–(iv)

3. (a)–(iii), (b)–(iv), (c)–(ii), (d)–(i)

NTA UGC NET YANI NIMI G NET

4. (a)–(iv), (b)–(iii), (c)–(ii), (d)–(i)

Question Number : 52 Question Id : 91394310746 Question Type : MCQ Option Shuffling : Yes Display Question Number : Yes Single Line Question Option : No Option Orientation : Vertical

Correct Marks : 2 Wrong Marks : 0

Match List I with List II and choose the correct answer from the code given below.

	List I		**List II**
(a)	Equivalence	(i)	$p \Rightarrow q$
(b)	Contrapositive	(ii)	$p \Rightarrow q : q \Rightarrow p$
(c)	Converse	(iii)	$p \Rightarrow q : \sim q \Rightarrow \sim p$
(d)	Implication	(iv)	$p \Leftrightarrow q$

Code :

Options :

1. (a)–(i), (b)–(ii), (c)–(iii), (d)–(iv)

2. (a)–(ii), (b)–(i), (c)–(iii), (d)–(iv)

3. (a)–(iii), (b)–(iv), (c)–(ii), (d)–(i)

4. (a)–(iv), (b)–(iii), (c)–(ii), (d)–(i)

Question Number : 53 Question Id : 91394310747 Question Type : MCQ Option Shuffling : Yes Display Question Number : Yes Single Line Question Option : No Option Orientation : Vertical

Correct Marks : 2 Wrong Marks : 0

A box contains six red balls and four green balls. Four balls are selected at random from the box. What is the probability that two of the selected balls will be red and two will be green ?

Options :

1. $\frac{1}{14}$

2. $\frac{3}{7}$

3. $\frac{1}{35}$

4. $\frac{1}{9}$

NTA UGC NET YANI NIMI G NET

Question Number : 53 Question Id : 91394310747 Question Type : MCQ Option Shuffling : Yes Display Question Number : Yes Single Line Question Option : No Option Orientation : Vertical

Correct Marks : 2 Wrong Marks : 0

A box contains six red balls and four green balls. Four balls are selected at random from the box. What is the probability that two of the selected balls will be red and two will be green ?

Options :

1. $\frac{1}{14}$

2. $\frac{3}{7}$

3. $\frac{1}{35}$

4. $\frac{1}{9}$

Question Number : 54 Question Id : 91394310748 Question Type : MCQ Option Shuffling : Yes Display Question Number : Yes Single Line Question Option : No Option Orientation : Vertical

Correct Marks : 2 Wrong Marks : 0

A survey has been conducted on methods of commuter travel. Each respondent was asked to check Bus, Train or Automobile as a major method of travelling to work. More than one answer was permitted. The results reported were as follows :

Bus 30 people; Train 35 people; Automobile 100 people; Bus and Train 15 people; Bus and Automobile 15 people, Train and Automobile 20 people; and all the three methods 5 people. How many people completed the survey form ?

Options :

1. 120

2. 165

3. 160

4. 115

NTA UGC NET KANI NIMI G NET

Question Number : 54 Question Id : 91394310748 Question Type : MCQ Option Shuffling : Yes Display Question Number : Yes Single Line Question Option : No Option Orientation : Vertical

Correct Marks : 2 Wrong Marks : 0

A survey has been conducted on methods of commuter travel. Each respondent was asked to check Bus, Train or Automobile as a major method of travelling to work. More than one answer was permitted. The results reported were as follows :

Bus 30 people; Train 35 people; Automobile 100 people; Bus and Train 15 people; Bus and Automobile 15 people, Train and Automobile 20 people; and all the three methods 5 people. How many people completed the survey form ?

Options :

1. 120

2. 165

3. 160

4. 115

Question Number : 55 Question Id : 91394310749 Question Type : MCQ Option Shuffling : Yes Display Question Number : Yes Single Line Question Option : No Option Orientation : Vertical

Correct Marks : 2 Wrong Marks : 0

Which of the following statements are true ?

(i) Every logic network is equivalent to one using just NAND gates or just NOR gates.

(ii) Boolean expressions and logic networks correspond to labelled acyclic digraphs.

(iii) No two Boolean algebras with n atoms are isomorphic.

(iv) Non-zero elements of finite Boolean algebras are not uniquely expressible as joins of atoms.

Choose the correct answer from the code given below :

Code :

Options :

1. (i) and (iv) only

2. (i), (ii) and (iii) only

3. (i) and (ii) only

4. (ii), (iii) and (iv) only

Question Number : 55 Question Id : 91394310749 Question Type : MCQ Option Shuffling : Yes Display Question Number : Yes Single Line Question Option : No Option Orientation : Vertical

Correct Marks : 2 Wrong Marks : 0

NTA UGC NET YANI NIMI G NET

Which of the following statements are true ?

(i) Every logic network is equivalent to one using just NAND gates or just NOR gates.

(ii) Boolean expressions and logic networks correspond to labelled acyclic digraphs.

(iii) No two Boolean algebras with n atoms are isomorphic.

(iv) Non-zero elements of finite Boolean algebras are not uniquely expressible as joins of atoms.

Choose the correct answer from the code given below :

Code :

Options :

1. (i) and (iv) only

2. (i), (ii) and (iii) only

3. (i) and (ii) only

4. (ii), (iii) and (iv) only

Question Number : 56 Question Id : 91394310750 Question Type : MCQ Option Shuffling : Yes Display Question Number : Yes Single Line Question Option : No Option Orientation : Vertical

Correct Marks : 2 Wrong Marks : 0

The relation $\leq$ and $<$ on a boolean algebra are defined as :

$x \leq y$ if and only if $x \vee y = y$

$x < y$ means $x \leq y$ but $x \neq y$

$x \geq y$ means $y \leq x$ and

$x > y$ means $y < x$

Considering the above definitions, which of the following is ***not*** true in the boolean algebra ?

(i) If $x \leq y$ and $y \leq z$, then $x \leq z$

(ii) If $x \leq y$ and $y \leq x$, then $x = y$

(iii) If $x < y$ and $y < z$, then $x \leq y$

(iv) If $x < y$ and $y < z$, then $x < y$

Choose the correct answer from the code given below :

Code :

Options :

1. (i) and (ii) only

NTA UGC NET YANI NIMI G NET

2. (ii) and (iii) only

3. (iii) only

4. (iv) only

Question Number : 56 Question Id : 91394310750 Question Type : MCQ Option Shuffling : Yes Display Question Number : Yes Single Line Question Option : No Option Orientation : Vertical

Correct Marks : 2 Wrong Marks : 0

The relation $\leq$ and $<$ on a boolean algebra are defined as :

$x \leq y$ if and only if $x \vee y = y$

$x < y$ means $x \leq y$ but $x \neq y$

$x \geq y$ means $y \leq x$ and

$x > y$ means $y < x$

Considering the above definitions, which of the following is ***not*** true in the boolean algebra ?

(i) If $x \leq y$ and $y \leq z$, then $x \leq z$

(ii) If $x \leq y$ and $y \leq x$, then $x = y$

(iii) If $x < y$ and $y < z$, then $x \leq y$

(iv) If $x < y$ and $y < z$, then $x < y$

Choose the correct answer from the code given below :

Code :

Options :

1. (i) and (ii) only

2. (ii) and (iii) only

3. (iii) only

4. (iv) only

NTA UGC NET YANI NIMI G NET

Question Number : 57 Question Id : 91394310751 Question Type : MCQ Option Shuffling : Yes Display Question Number : Yes Single Line Question Option : No Option Orientation : Vertical

Correct Marks : 2 Wrong Marks : 0

The boolean expression $\overline{A} . B + A . \overline{B} + A . B$ is equivalent to

Options :

1. $\overline{A} . B$

2. $\overline{A + B}$

3. A.B

4. A + B

Question Number : 57 Question Id : 91394310751 Question Type : MCQ Option Shuffling : Yes Display Question Number : Yes Single Line Question Option : No Option Orientation : Vertical

Correct Marks : 2 Wrong Marks : 0

The boolean expression $\overline{A} . B + A . \overline{B} + A . B$ is equivalent to

Options :

1. $\overline{A} . B$

2. $\overline{A + B}$

3. A.B

4. A + B

Question Number : 58 Question Id : 91394310752 Question Type : MCQ Option Shuffling : Yes Display Question Number : Yes Single Line Question Option : No Option Orientation : Vertical

Correct Marks : 2 Wrong Marks : 0

In PERT/CPM, the merge event represents _____ of two or more events.

Options :

1. completion

2. beginning

3. splitting

4. joining

Question Number : 58 Question Id : 91394310752 Question Type : MCQ Option Shuffling : Yes Display Question Number : Yes Single Line Question Option : No Option Orientation : Vertical

Correct Marks : 2 Wrong Marks : 0

In PERT/CPM, the merge event represents _____ of two or more events.

NTA UGC NET YANI NIMI G NET

Options :

1. completion

2. beginning

3. splitting

4. joining

Question Number : 59 Question Id : 91394310753 Question Type : MCQ Option Shuffling : Yes Display Question Number : Yes Single Line Question Option : No Option Orientation : Vertical

Correct Marks : 2 Wrong Marks : 0

Use Dual Simplex Method to solve the following problem :

Maximize $z = -2x_1 - 3x_2$

subject to :

$$x_1 + x_2 \geq 2$$
$$2x_1 + x_2 \leq 10$$
$$x_1 + x_2 \leq 8$$
$$x_1, x_2 \geq 0$$

Options :

1. $x_1 = 2, x_2 = 0$, and $z = -4$

2. $x_1 = 2, x_2 = 6$ and $z = -22$

3. $x_1 = 0, x_2 = 2$ and $z = -6$

4. $x_1 = 6, x_2 = 2$ and $z = -18$

NITA UGC NET YANI NIMI G NET

Question Number : 59 Question Id : 91394310753 Question Type : MCQ Option Shuffling : Yes Display Question Number : Yes Single Line Question Option : No Option Orientation : Vertical

Correct Marks : 2 Wrong Marks : 0

Use Dual Simplex Method to solve the following problem :

Maximize $z = -2x_1 - 3x_2$

subject to :

$$x_1 + x_2 \geq 2$$
$$2x_1 + x_2 \leq 10$$
$$x_1 + x_2 \leq 8$$
$$x_1, x_2 \geq 0$$

Options :

1. $x_1 = 2, x_2 = 0$, and $z = -4$

2. $x_1 = 2, x_2 = 6$ and $z = -22$

3. $x_1 = 0, x_2 = 2$ and $z = -6$

4. $x_1 = 6, x_2 = 2$ and $z = -18$

Question Number : 60 Question Id : 91394310754 Question Type : MCQ Option Shuffling : Yes Display Question Number : Yes Single Line Question Option : No Option Orientation : Vertical

Correct Marks : 2 Wrong Marks : 0

In computers, subtraction is generally carried out by

Options :

1. 9's complement

2. 1's complement

3. 10's complement

4. 2's complement

NTA UGC NET YANI NIMI G NET

Question Number : 60 Question Id : 91394310754 Question Type : MCQ Option Shuffling : Yes Display Question Number : Yes Single Line Question Option : No Option Orientation : Vertical

Correct Marks : 2 Wrong Marks : 0

In computers, subtraction is generally carried out by

Options :

1. 9's complement

2. 1's complement

3. 10's complement

4. 2's complement

Question Number : 61 Question Id : 91394310755 Question Type : MCQ Option Shuffling : Yes Display Question Number : Yes Single Line Question Option : No Option Orientation : Vertical

Correct Marks : 2 Wrong Marks : 0

Consider the following boolean equations :

(i) $wx + w(x + y) + x(x + y) = x + wy$

(ii) $(w\bar{x}(y + x\bar{z}) + \bar{w}\,\bar{x})\,y = \bar{x}y$

What can you say about the above equations ?

Options :

1. (i) is true and (ii) is false

2. (i) is false and (ii) is true

3. Both (i) and (ii) are true

4. Both (i) and (ii) are false

Question Number : 61 Question Id : 91394310755 Question Type : MCQ Option Shuffling : Yes Display Question Number : Yes Single Line Question Option : No Option Orientation : Vertical

Correct Marks : 2 Wrong Marks : 0

Consider the following boolean equations :

(i) $wx + w(x + y) + x(x + y) = x + wy$

(ii) $(w\bar{x}(y + x\bar{z}) + \bar{w}\,\bar{x})\,y = \bar{x}y$

What can you say about the above equations ?

Options :

1. (i) is true and (ii) is false

2. (i) is false and (ii) is true

3. Both (i) and (ii) are true

4. Both (i) and (ii) are false

NTA UGC NET YANI NIMI G NET

Question Number : 62 Question Id : 91394310756 Question Type : MCQ Option Shuffling : Yes Display Question Number : Yes Single Line Question Option : No Option Orientation : Vertical

Correct Marks : 2 Wrong Marks : 0

Consider the graph shown below :

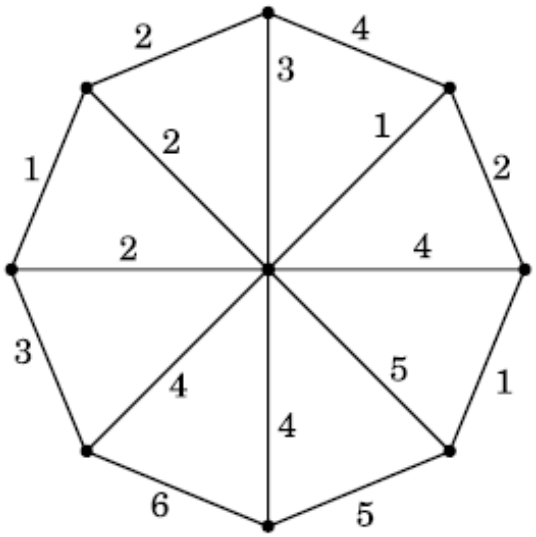

Use Kruskal's algorithm to find the minimum spanning tree of the graph.
The weight of this minimum spanning tree is

Options :

1. 17

2. 14

3. 16

4. 13

Question Number : 62 Question Id : 91394310756 Question Type : MCQ Option Shuffling : Yes Display Question Number : Yes Single Line Question Option : No Option Orientation : Vertical

Correct Marks : 2 Wrong Marks : 0

Consider the graph shown below :

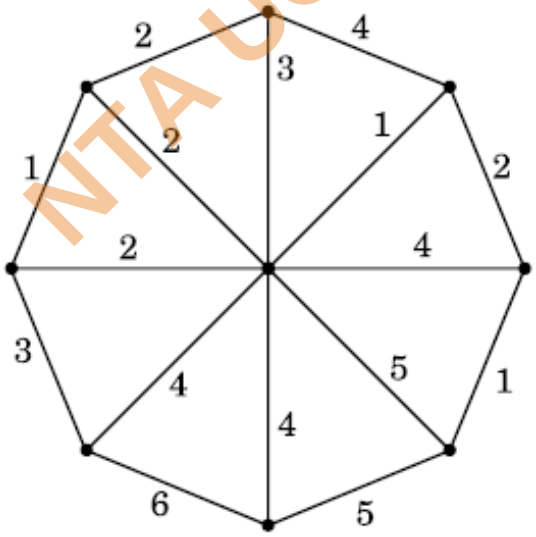

Use Kruskal's algorithm to find the minimum spanning tree of the graph.
The weight of this minimum spanning tree is

Options :

NTA UGC NET YANI NIMI G NET

1. 17

2. 14

3. 16

4. 13

Question Number : 63 Question Id : 91394310757 Question Type : MCQ Option Shuffling : Yes Display Question Number : Yes Single Line Question Option : No Option Orientation : Vertical

Correct Marks : 2 Wrong Marks : 0

Consider the following statements :

(i) Auto increment addressing mode is useful in creating self-relocating code.

(ii) If auto increment addressing mode is included in an instruction set architecture, then an additional ALU is required for effective address calculation.

(iii) In auto increment addressing mode, the amount of increment depends on the size of the data item accessed.

Which of the above statements is/are true ?

Choose the correct answer from the code given below :

Code :

Options :

1. (i) and (ii) only

2. (ii) and (iii) only

3. (iii) only

4. (ii) only

NTA UGC NET YANI NIMI G NET

Question Number : 63 Question Id : 91394310757 Question Type : MCQ Option Shuffling : Yes Display Question Number : Yes Single Line Question Option : No Option Orientation : Vertical

Correct Marks : 2 Wrong Marks : 0

Consider the following statements :

(i) Auto increment addressing mode is useful in creating self-relocating code.

(ii) If auto increment addressing mode is included in an instruction set architecture, then an additional ALU is required for effective address calculation.

(iii) In auto increment addressing mode, the amount of increment depends on the size of the data item accessed.

Which of the above statements is/are true ?

Choose the correct answer from the code given below :

Code :

Options :

1. (i) and (ii) only

2. (ii) and (iii) only

3. (iii) only

4. (ii) only

Question Number : 64 Question Id : 91394310758 Question Type : MCQ Option Shuffling : Yes Display Question Number : Yes Single Line Question Option : No Option Orientation : Vertical

Correct Marks : 2 Wrong Marks : 0

A computer uses a memory unit with 256 K words of 32 bits each. A binary instruction code is stored in one word of memory. The instruction has four parts : an indirect bit, an operation code and a register code part to specify one of 64 registers and an address part. How many bits are there in the operation code, the register code part and the address part ?

Options :

1. 7, 6, 18

2. 6, 7, 18

3. 7, 7, 18

4. 18, 7, 7

Question Number : 64 Question Id : 91394310758 Question Type : MCQ Option Shuffling : Yes Display Question Number : Yes Single Line Question Option : No Option Orientation : Vertical

Correct Marks : 2 Wrong Marks : 0

NTA UGC NET YANI NIMI G NET

A computer uses a memory unit with 256 K words of 32 bits each. A binary instruction code is stored in one word of memory. The instruction has four parts : an indirect bit, an operation code and a register code part to specify one of 64 registers and an address part. How many bits are there in the operation code, the register code part and the address part ?

Options :

1. 7, 6, 18

2. 6, 7, 18

3. 7, 7, 18

4. 18, 7, 7

Question Number : 65 Question Id : 91394310759 Question Type : MCQ Option Shuffling : Yes Display Question Number : Yes Single Line Question Option : No Option Orientation : Vertical

Correct Marks : 2 Wrong Marks : 0

Consider the following x86 – assembly language instructions :

MOV AL, 153

NEG AL

The contents of the destination register AL (in 8-bit binary notation), the status of Carry Flag (CF) and Sign Flag (SF) after the execution of above instructions, are

Options :

1. AL = 0110 0110; CF = 0; SF = 0

2. AL = 0110 0111; CF = 0; SF = 1

3. AL = 0110 0110; CF = 1; SF = 1

4. AL = 0110 0111; CF = 1; SF = 0

NTA UGC NET YANI NIMI G NET

Question Number : 65 Question Id : 91394310759 Question Type : MCQ Option Shuffling : Yes Display Question Number : Yes Single Line Question Option : No Option Orientation : Vertical

Correct Marks : 2 Wrong Marks : 0

Consider the following x86 – assembly language instructions :

MOV AL, 153

NEG AL

The contents of the destination register AL (in 8-bit binary notation), the status of Carry Flag (CF) and Sign Flag (SF) after the execution of above instructions, are

Options :

1. AL = 0110 0110; CF = 0; SF = 0

2. AL = 0110 0111; CF = 0; SF = 1

3. AL = 0110 0110; CF = 1; SF = 1

4. AL = 0110 0111; CF = 1; SF = 0

Question Number : 66 Question Id : 91394310760 Question Type : MCQ Option Shuffling : Yes Display Question Number : Yes Single Line Question Option : No Option Orientation : Vertical

Correct Marks : 2 Wrong Marks : 0

The decimal floating point number –40.1 represented using IEEE–754 32-bit representation and written in hexadecimal form is

Options :

1. 0xC2206666

2. 0xC2206000

3. 0xC2006666

4. 0xC2006000

Question Number : 66 Question Id : 91394310760 Question Type : MCQ Option Shuffling : Yes Display Question Number : Yes Single Line Question Option : No Option Orientation : Vertical

Correct Marks : 2 Wrong Marks : 0

The decimal floating point number –40.1 represented using IEEE–754 32-bit representation and written in hexadecimal form is

Options :

1. 0xC2206666

2. 0xC2206000

3. 0xC2006666

4. 0xC2006000

Question Number : 67 Question Id : 91394310761 Question Type : MCQ Option Shuffling : Yes Display Question Number : Yes Single Line Question Option : No Option Orientation : Vertical

Correct Marks : 2 Wrong Marks : 0

NTA UGC NET YANI NIMI G NET

Find the boolean expression for the logic circuit shown below :

(1-NAND gate, 2-NOR gate, 3-NOR gate)

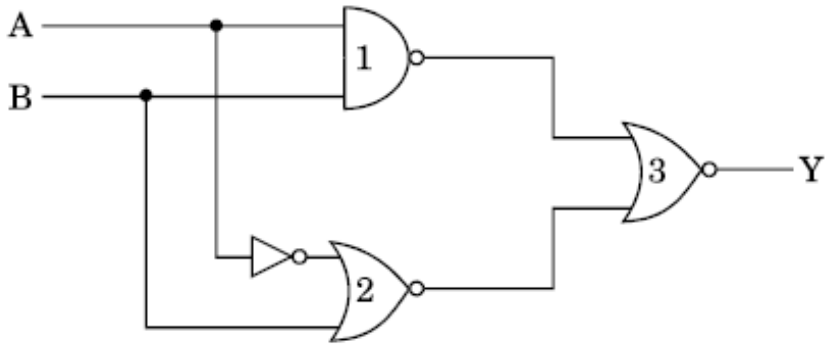

Options :

1. $A\overline{B}$

2. $\overline{A}B$

3. AB

4. $\overline{A}\,\overline{B}$

Question Number : 67 Question Id : 91394310761 Question Type : MCQ Option Shuffling : Yes Display Question Number : Yes Single Line Question Option : No Option Orientation : Vertical

Correct Marks : 2 Wrong Marks : 0

Find the boolean expression for the logic circuit shown below :

(1-NAND gate, 2-NOR gate, 3-NOR gate)

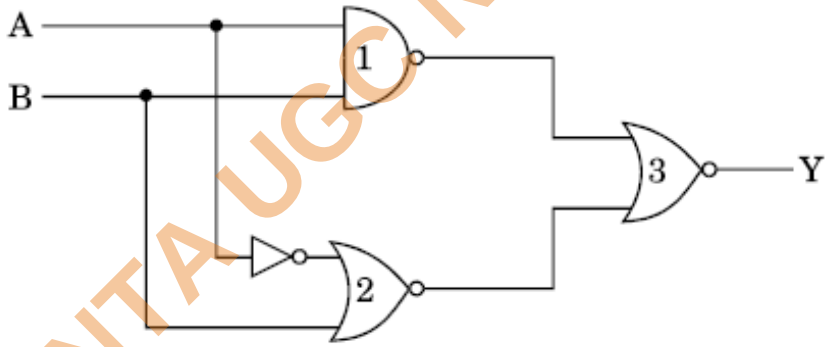

Options :

1. $A\overline{B}$

2. $\overline{A}B$

3. AB

4. $\overline{A}\,\overline{B}$

NTA UGC NET YANI NIMI G NET

Question Number : 68 Question Id : 91394310762 Question Type : MCQ Option Shuffling : Yes Display Question Number : Yes Single Line Question Option : No Option Orientation : Vertical

Correct Marks : 2 Wrong Marks : 0

Consider a disk pack with 32 surfaces, 64 tracks and 512 sectors per pack. 256 bytes of data are stored in a bit serial manner in a sector. The number of bits required to specify a particular sector in the disk is

Options :

1. 18

2. 19

3. 20

4. 22

Question Number : 68 Question Id : 91394310762 Question Type : MCQ Option Shuffling : Yes Display Question Number : Yes Single Line Question Option : No Option Orientation : Vertical

Correct Marks : 2 Wrong Marks : 0

Consider a disk pack with 32 surfaces, 64 tracks and 512 sectors per pack. 256 bytes of data are stored in a bit serial manner in a sector. The number of bits required to specify a particular sector in the disk is

Options :

1. 18

2. 19

3. 20

4. 22

NTA UGC NET YANI NIMI G NET

Question Number : 69 Question Id : 91394310763 Question Type : MCQ Option Shuffling : Yes Display Question Number : Yes Single Line Question Option : No Option Orientation : Vertical

Correct Marks : 2 Wrong Marks : 0

Consider a system with 2 level cache. Access times of Level 1 cache, Level 2 cache and main memory are 0·5 ns, 5 ns and 100 ns respectively. The hit rates of Level 1 and Level 2 caches are 0·7 and 0·8, respectively. What is the average access time of the system ignoring the search time within the cache ?

Options :

1. 35·20 ns

2. 7·55 ns

3. 20·75 ns

4. 24·35 ns

Question Number : 69 Question Id : 91394310763 Question Type : MCQ Option Shuffling : Yes Display Question Number : Yes Single Line Question Option : No Option Orientation : Vertical

Correct Marks : 2 Wrong Marks : 0

Consider a system with 2 level cache. Access times of Level 1 cache, Level 2 cache and main memory are 0·5 ns, 5 ns and 100 ns respectively. The hit rates of Level 1 and Level 2 caches are 0·7 and 0·8, respectively. What is the average access time of the system ignoring the search time within the cache ?

Options :

1. 35·20 ns

2. 7·55 ns

3. 20·75 ns

4. 24·35 ns

Question Number : 70 Question Id : 91394310764 Question Type : MCQ Option Shuffling : Yes Display Question Number : Yes Single Line Question Option : No Option Orientation : Vertical

Correct Marks : 2 Wrong Marks : 0

If a graph (G) has no loops or parallel edges, and if the number of vertices (n) in the graph is $n \geq 3$, then graph G is Hamiltonian if

(i) $\deg(v) \geq \frac{n}{3}$ for each vertex v

(ii) $\deg(v) + \deg(w) \geq n$ whenever v and w are not connected by an edge.

(iii) $E(G) \geq \frac{1}{3}(n-1)(n-2) + 2$

Choose the correct answer from the code given below :

Code :

Options :

1. (i) and (iii) only

2. (ii) only

3. (ii) and (iii) only

NTA UGC NET YANI NIMI G NET

4. (iii) only

Question Number : 70 Question Id : 91394310764 Question Type : MCQ Option Shuffling : Yes Display Question Number : Yes Single Line Question Option : No Option Orientation : Vertical

Correct Marks : 2 Wrong Marks : 0

If a graph (G) has no loops or parallel edges, and if the number of vertices (n) in the graph is $n \geq 3$, then graph G is Hamiltonian if

(i) $\deg(v) \geq \frac{n}{3}$ for each vertex v

(ii) $\deg(v) + \deg(w) \geq n$ whenever v and w are not connected by an edge.

(iii) $E(G) \geq \frac{1}{3}(n-1)(n-2) + 2$

Choose the correct answer from the code given below :

Code :

Options :

1. (i) and (iii) only

2. (ii) only

3. (ii) and (iii) only

4. (iii) only

Question Number : 71 Question Id : 91394310765 Question Type : MCQ Option Shuffling : Yes Display Question Number : Yes Single Line Question Option : No Option Orientation : Vertical

Correct Marks : 2 Wrong Marks : 0

The solution of recurrence relation :

T(n) = 2 T (sqrt(n)) + lg (n)

is

Options :

1. O(lg (n))

2. O(n lg (n))

3. O(lg (n) lg (n))

NTA UGC NET YANI NIMI G NET

4. O(lg (n) lg(lg (n)))

Question Number : 71 Question Id : 91394310765 Question Type : MCQ Option Shuffling : Yes Display Question Number : Yes Single Line Question Option : No Option Orientation : Vertical

Correct Marks : 2 Wrong Marks : 0

The solution of recurrence relation :

T(n) = 2 T (sqrt(n)) + lg (n)

is

Options :

1. O(lg (n))

2. O(n lg (n))

3. O(lg (n) lg (n))

4. O(lg (n) lg(lg (n)))

Question Number : 72 Question Id : 91394310766 Question Type : MCQ Option Shuffling : Yes Display Question Number : Yes Single Line Question Option : No Option Orientation : Vertical

Correct Marks : 2 Wrong Marks : 0

The elements 42, 25, 30, 40, 22, 35, 26 are inserted one by one in the given order into a max-heap. The resultant max-heap is stored in an array implementation as

Options :

1. <42, 40, 35, 25, 22, 30, 26>

2. <42, 35, 40, 22, 25, 30, 26>

3. <42, 40, 35, 25, 22, 26, 30>

4. <42, 35, 40, 22, 25, 26, 30>

Question Number : 72 Question Id : 91394310766 Question Type : MCQ Option Shuffling : Yes Display Question Number : Yes Single Line Question Option : No Option Orientation : Vertical

Correct Marks : 2 Wrong Marks : 0

The elements 42, 25, 30, 40, 22, 35, 26 are inserted one by one in the given order into a max-heap. The resultant max-heap is stored in an array implementation as

Options :

1. <42, 40, 35, 25, 22, 30, 26>

NTA UGC NET YANI NIMI G NET

2. <42, 35, 40, 22, 25, 30, 26>

3. <42, 40, 35, 25, 22, 26, 30>

4. <42, 35, 40, 22, 25, 26, 30>

Question Number : 73 Question Id : 91394310767 Question Type : MCQ Option Shuffling : Yes Display Question Number : Yes Single Line Question Option : No Option Orientation : Vertical

Correct Marks : 2 Wrong Marks : 0

Consider two sequences X and Y :

X = <0, 1, 2, 1, 3, 0, 1>

Y = <1, 3, 2, 0, 1, 0>

The length of longest common subsequence between X and Y is

Options :

1. 2

2. 3

3. 4

4. 5

NTA UGC NET YANI NIMI G NET

Question Number : 73 Question Id : 91394310767 Question Type : MCQ Option Shuffling : Yes Display Question Number : Yes Single Line Question Option : No Option Orientation : Vertical

Correct Marks : 2 Wrong Marks : 0

Consider two sequences X and Y :

X = <0, 1, 2, 1, 3, 0, 1>

Y = <1, 3, 2, 0, 1, 0>

The length of longest common subsequence between X and Y is

Options :

1. 2

2. 3

3. 4

4. 5

Question Number : 74 Question Id : 91394310768 Question Type : MCQ Option Shuffling : Yes Display Question Number : Yes Single Line Question Option : No Option Orientation : Vertical

Correct Marks : 2 Wrong Marks : 0

Consider the following postfix expression with single digit operands :

6 2 3 * / 4 2 * + 6 8 * –

The top two elements of the stack after the second * is evaluated, are :

Options :

1. 8, 2

2. 8, 1

3. 6, 2

4. 6, 3

Question Number : 74 Question Id : 91394310768 Question Type : MCQ Option Shuffling : Yes Display Question Number : Yes Single Line Question Option : No Option Orientation : Vertical

Correct Marks : 2 Wrong Marks : 0

Consider the following postfix expression with single digit operands :

6 2 3 * / 4 2 * + 6 8 * –

The top two elements of the stack after the second * is evaluated, are :

Options :

1. 8, 2

2. 8, 1

3. 6, 2

4. 6, 3

NTA UGC NET YANI NIMI G NET

Question Number : 75 Question Id : 91394310769 Question Type : MCQ Option Shuffling : Yes Display Question Number : Yes Single Line Question Option : No Option Orientation : Vertical

Correct Marks : 2 Wrong Marks : 0

A binary search tree is constructed by inserting the following numbers in order :

60, 25, 72, 15, 30, 68, 101, 13, 18, 47, 70, 34

The number of nodes is the left subtree is

Options :

1. 5

2. 6

3. 7

4. 3

Question Number : 75 Question Id : 91394310769 Question Type : MCQ Option Shuffling : Yes Display Question Number : Yes Single Line Question Option : No Option Orientation : Vertical

Correct Marks : 2 Wrong Marks : 0

A binary search tree is constructed by inserting the following numbers in order :

60, 25, 72, 15, 30, 68, 101, 13, 18, 47, 70, 34

The number of nodes is the left subtree is

Options :

1. 5

2. 6

3. 7

4. 3

NTA UGC NET YANI NIMI G NET

Question Number : 76 Question Id : 91394310770 Question Type : MCQ Option Shuffling : Yes Display Question Number : Yes Single Line Question Option : No Option Orientation : Vertical

Correct Marks : 2 Wrong Marks : 0

In a ternary tree, the number of internal nodes of degree 1, 2, and 3 is 4, 3, and 3 respectively. The number of leaf nodes in the ternary tree is

Options :

1. 9

2. 10

3. 11

4. 12

Question Number : 76 Question Id : 91394310770 Question Type : MCQ Option Shuffling : Yes Display Question Number : Yes Single Line Question Option : No Option Orientation : Vertical

Correct Marks : 2 Wrong Marks : 0

In a ternary tree, the number of internal nodes of degree 1, 2, and 3 is 4, 3, and 3 respectively. The number of leaf nodes in the ternary tree is

Options :

1. 9

2. 10

3. 11

4. 12

Question Number : 77 Question Id : 91394310771 Question Type : MCQ Option Shuffling : Yes Display Question Number : Yes Single Line Question Option : No Option Orientation : Vertical

Correct Marks : 2 Wrong Marks : 0

Match List I with List II and choose the correct answer from the code given below.

	List I (Graph Algorithm)		**List II (Time Complexity)**
(a)	Dijkstra's algorithm	(i)	$O(E \lg E)$
(b)	Kruskal's algorithm	(ii)	$\Theta(V^3)$
(c)	Floyd-Warshall algorithm	(iii)	$O(V^2)$
(d)	Topological sorting	(iv)	$\Theta(V + E)$

where V and E are the number of vertices and edges in graph respectively.

Code :

Options :

1. (a)–(i), (b)–(iii), (c)–(ii), (d)–(iv)

2. (a)–(iii), (b)–(i), (c)–(ii), (d)–(iv)

3. (a)–(i), (b)–(iii), (c)–(iv), (d)–(ii)

NTA UGC NET YANI NIMI G NET

4. (a)–(iii), (b)–(i), (c)–(iv), (d)–(ii)

Question Number : 77 Question Id : 91394310771 Question Type : MCQ Option Shuffling : Yes Display Question Number : Yes Single Line Question Option : No Option Orientation : Vertical

Correct Marks : 2 Wrong Marks : 0

Match List I with List II and choose the correct answer from the code given below.

	List I (Graph Algorithm)		**List II (Time Complexity)**
(a)	Dijkstra's algorithm	(i)	$O(E \lg E)$
(b)	Kruskal's algorithm	(ii)	$\Theta(V^3)$
(c)	Floyd-Warshall algorithm	(iii)	$O(V^2)$
(d)	Topological sorting	(iv)	$\Theta(V + E)$

where V and E are the number of vertices and edges in graph respectively.

Code :

Options :

1. (a)–(i), (b)–(iii), (c)–(ii), (d)–(iv)

2. (a)–(iii), (b)–(i), (c)–(ii), (d)–(iv)

3. (a)–(i), (b)–(iii), (c)–(iv), (d)–(ii)

4. (a)–(iii), (b)–(i), (c)–(iv), (d)–(ii)

Question Number : 78 Question Id : 91394310772 Question Type : MCQ Option Shuffling : Yes Display Question Number : Yes Single Line Question Option : No Option Orientation : Vertical

Correct Marks : 2 Wrong Marks : 0

In K-coloring of an undirected graph $G = (V, E)$ is a function $c : V \rightarrow \{0, 1, ..., K - 1\}$ such that $c(u) \neq c(v)$ for every edge $(u, v) \in E$.

Which of the following is ***not*** correct ?

Options :

1. G is bipartite

2. G is 2-colorable

3. G has cycles of odd length

NTA UGC NET YANI NIMI G NET

4. G has no cycles of odd length

Question Number : 78 Question Id : 91394310772 Question Type : MCQ Option Shuffling : Yes Display Question Number : Yes Single Line Question Option : No Option Orientation : Vertical

Correct Marks : 2 Wrong Marks : 0

In K-coloring of an undirected graph G = (V, E) is a function

$c : V \rightarrow \{0, 1, ..., K-1\}$ such that $c(u) \neq c(v)$ for every edge $(u, v) \in E$.

Which of the following is ***not*** correct ?

Options :

1. G is bipartite

2. G is 2-colorable

3. G has cycles of odd length

4. G has no cycles of odd length

Question Number : 79 Question Id : 91394310773 Question Type : MCQ Option Shuffling : Yes Display Question Number : Yes Single Line Question Option : No Option Orientation : Vertical

Correct Marks : 2 Wrong Marks : 0

Consider a singly linked list. What is the worst case time complexity of the best-known algorithm to delete the node a, pointer to this node is q, from the list ?

Options :

1. O(n lg n)

2. O(n)

3. O(lg n)

4. O(1)

NTA UGC NET YANI NIMI G NET

Question Number : 79 Question Id : 91394310773 Question Type : MCQ Option Shuffling : Yes Display Question Number : Yes Single Line Question Option : No Option Orientation : Vertical

Correct Marks : 2 Wrong Marks : 0

Consider a singly linked list. What is the worst case time complexity of the best-known algorithm to delete the node a, pointer to this node is q, from the list ?

Options :

1. O(n lg n)

2. O(n)

3. O(lg n)

4. O(1)

Question Number : 80 Question Id : 91394310774 Question Type : MCQ Option Shuffling : Yes Display Question Number : Yes Single Line Question Option : No Option Orientation : Vertical

Correct Marks : 2 Wrong Marks : 0

The second smallest of n elements can be found with _____ comparisons in the worst case.

Options :

1. n – 1

2. lg n

3. n + ceil(lg n) – 2

4. $\frac{3n}{2}$

NTA UGC NET YANI NIMI G NET

Question Number : 80 Question Id : 91394310774 Question Type : MCQ Option Shuffling : Yes Display Question Number : Yes Single Line Question Option : No Option Orientation : Vertical

Correct Marks : 2 Wrong Marks : 0

The second smallest of n elements can be found with _____ comparisons in the worst case.

Options :

1. n – 1

2. lg n

3. n + ceil(lg n) – 2

4. $\frac{3n}{2}$

Question Number : 81 Question Id : 91394310775 Question Type : MCQ Option Shuffling : Yes Display Question Number : Yes Single Line Question Option : No Option Orientation : Vertical

Correct Marks : 2 Wrong Marks : 0

Let r = a(a + b)*, s = aa*b and t = a*b be three regular expressions.
Consider the following :

(i) $L(s) \subseteq L(r)$ and $L(s) \subseteq L(t)$

(ii) $L(r) \subseteq L(s)$ and $L(s) \subseteq L(t)$

Choose the correct answer from the code given below :

Code :

Options :

1. Only (i) is correct.

2. Only (ii) is correct.

3. Both (i) and (ii) are correct.

4. Neither (i) nor (ii) is correct.

Question Number : 81 Question Id : 91394310775 Question Type : MCQ Option Shuffling : Yes Display Question Number : Yes Single Line Question Option : No Option Orientation : Vertical

Correct Marks : 2 Wrong Marks : 0

Let r = a(a + b)*, s = aa*b and t = a*b be three regular expressions.
Consider the following :

(i) $L(s) \subseteq L(r)$ and $L(s) \subseteq L(t)$

(ii) $L(r) \subseteq L(s)$ and $L(s) \subseteq L(t)$

Choose the correct answer from the code given below :

Code :

Options :

1. Only (i) is correct.

2. Only (ii) is correct.

3. Both (i) and (ii) are correct.

4. Neither (i) nor (ii) is correct.

NTA UGC NET YANI NIMI G NET

Question Number : 82 Question Id : 91394310776 Question Type : MCQ Option Shuffling : Yes Display Question Number : Yes Single Line Question Option : No Option Orientation : Vertical

Correct Marks : 2 Wrong Marks : 0

Consider the language L given by

$$L = \{2^{nk} \mid k > 0, \text{ and n is non-negative integer number}\}$$

The minimum number of states of finite automaton which accepts the language L is

Options :

1. n

2. $n + 1$

3. $\frac{n(n+1)}{2}$

4. 2^n

Question Number : 82 Question Id : 91394310776 Question Type : MCQ Option Shuffling : Yes Display Question Number : Yes Single Line Question Option : No Option Orientation : Vertical

Correct Marks : 2 Wrong Marks : 0

Consider the language L given by

$$L = \{2^{nk} \mid k > 0, \text{ and n is non-negative integer number}\}$$

The minimum number of states of finite automaton which accepts the language L is

Options :

1. n

2. $n + 1$

3. $\frac{n(n+1)}{2}$

4. 2^n

NTA UGC NET YANI NIMI G NET

Question Number : 83 Question Id : 91394310777 Question Type : MCQ Option Shuffling : Yes Display Question Number : Yes Single Line Question Option : No Option Orientation : Vertical

Correct Marks : 2 Wrong Marks : 0

The number of substrings that can be formed from string given by

a d e f b g h n m p

is

Options :

1. 10

2. 45

3. 55

4. 56

Question Number : 83 Question Id : 91394310777 Question Type : MCQ Option Shuffling : Yes Display Question Number : Yes Single Line Question Option : No Option Orientation : Vertical

Correct Marks : 2 Wrong Marks : 0

The number of substrings that can be formed from string given by

a d e f b g h n m p

is

Options :

1. 10

2. 45

3. 55

4. 56

Question Number : 84 Question Id : 91394310778 Question Type : MCQ Option Shuffling : Yes Display Question Number : Yes Single Line Question Option : No Option Orientation : Vertical

Correct Marks : 2 Wrong Marks : 0

Consider the following two languages :

L_1 = {x | for some y with $|y| = 2^{|x|}$, xy ∈ L and L is regular language}

L_2 = {x | for some y such that $|x| = |y|$, xy ∈ L and L is regular language}

Which one of the following is correct ?

Code :

Options :

1. Only L_1 is regular language

2. Only L_2 is regular language

JUTA UGC NET YANI NIMI G NET

3. Both L_1 and L_2 are regular languages

4. Both L_1 and L_2 are not regular languages

Question Number : 84 Question Id : 91394310778 Question Type : MCQ Option Shuffling : Yes Display Question Number : Yes Single Line Question Option : No Option Orientation : Vertical

Correct Marks : 2 Wrong Marks : 0

Consider the following two languages :

L_1 = {x | for some y with $|y| = 2^{|x|}$, xy ∈ L and L is regular language}

L_2 = {x | for some y such that $|x| = |y|$, xy ∈ L and L is regular language}

Which one of the following is correct ?

Code :

Options :

1. Only L_1 is regular language

2. Only L_2 is regular language

3. Both L_1 and L_2 are regular languages

4. Both L_1 and L_2 are not regular languages

Question Number : 85 Question Id : 91394310779 Question Type : MCQ Option Shuffling : Yes Display Question Number : Yes Single Line Question Option : No Option Orientation : Vertical

Correct Marks : 2 Wrong Marks : 0

Consider the following languages :

L_1 = $\{a^{n+m} b^n a^m \mid n, m \geq 0\}$

L_2 = $\{a^{n+m} b^{n+m} a^{n+m} \mid n, m \geq 0\}$

Which one of the following is correct ?

Code :

Options :

1. Only L_1 is context free language

2. Only L_2 is context free language

NTA UGC NET YANI NIMI G NET

3. Both L_1 and L_2 are context free languages

4. Both L_1 and L_2 are not context free languages

Question Number : 85 Question Id : 91394310779 Question Type : MCQ Option Shuffling : Yes Display Question Number : Yes Single Line Question Option : No Option Orientation : Vertical

Correct Marks : 2 Wrong Marks : 0

Consider the following languages :

$L_1 = \{a^{n+m} b^n a^m \mid n, m \geq 0\}$

$L_2 = \{a^{n+m} b^{n+m} a^{n+m} \mid n, m \geq 0\}$

Which one of the following is correct ?

Code :

Options :

1. Only L_1 is context free language

2. Only L_2 is context free language

3. Both L_1 and L_2 are context free languages

4. Both L_1 and L_2 are not context free languages

NTA UGC NET YANI NIMI G NET

Question Number : 86 Question Id : 91394310780 Question Type : MCQ Option Shuffling : Yes Display Question Number : Yes Single Line Question Option : No Option Orientation : Vertical

Correct Marks : 2 Wrong Marks : 0

Consider R to be any regular language and L_1, L_2 be any two context-free languages.

Which one of the following is correct ?

Options :

1. $\overline{L_1}$ is context free

2. $\overline{(L_1 \cup L_2)} - R$ is context free

3. $L_1 \cap L_2$ is context free

4. $L_1 - R$ is context free

Question Number : 86 Question Id : 91394310780 Question Type : MCQ Option Shuffling : Yes Display Question Number : Yes Single Line Question Option : No Option Orientation : Vertical

Correct Marks : 2 Wrong Marks : 0

Consider R to be any regular language and L_1, L_2 be any two context-free languages.

Which one of the following is correct ?

Options :

1. $\overline{L_1}$ is context free

2. $\overline{(L_1 \cup L_2)} - R$ is context free

3. $L_1 \cap L_2$ is context free

4. $L_1 - R$ is context free

Question Number : 87 Question Id : 91394310781 Question Type : MCQ Option Shuffling : Yes Display Question Number : Yes Single Line Question Option : No Option Orientation : Vertical

Correct Marks : 2 Wrong Marks : 0

Consider the following problems :

(i) Whether a finite state automaton halts on all inputs ?

(ii) Whether a given context free language is regular ?

(iii) Whether a Turing machine computes the product of two numbers ?

Which one of the following is correct ?

Code :

Options :

1. Only (i) and (iii) are undecidable problems

2. Only (ii) and (iii) are undecidable problems

3. Only (i) and (ii) are undecidable problems

4. (i), (ii) and (iii) are undecidable problems

NTA UGC NET YANI NIMI G NET

Question Number : 87 Question Id : 91394310781 Question Type : MCQ Option Shuffling : Yes Display Question Number : Yes Single Line Question Option : No Option Orientation : Vertical

Correct Marks : 2 Wrong Marks : 0

Consider the following problems :

(i) Whether a finite state automaton halts on all inputs ?

(ii) Whether a given context free language is regular ?

(iii) Whether a Turing machine computes the product of two numbers ?

Which one of the following is correct ?

Code :

Options :

1. Only (i) and (iii) are undecidable problems

2. Only (ii) and (iii) are undecidable problems

3. Only (i) and (ii) are undecidable problems

4. (i), (ii) and (iii) are undecidable problems

Question Number : 88 Question Id : 91394310782 Question Type : MCQ Option Shuffling : Yes Display Question Number : Yes Single Line Question Option : No Option Orientation : Vertical
Correct Marks : 2 Wrong Marks : 0

Which of the following problems is decidable for recursive languages (L) ?

Options :

1. Is $L = \phi$?

2. Is $w \in L$, where w is a string ?

3. Is $L = \Sigma^*$?

4. Is L = R, where R is a given regular set ?

NTA UGC NET YANI NIMI G NET

Question Number : 88 Question Id : 91394310782 Question Type : MCQ Option Shuffling : Yes Display Question Number : Yes Single Line Question Option : No Option Orientation : Vertical
Correct Marks : 2 Wrong Marks : 0

Which of the following problems is decidable for recursive languages (L) ?

Options :

1. Is $L = \phi$?

2. Is $w \in L$, where w is a string ?

3. Is $L = \Sigma^*$?

4. Is L = R, where R is a given regular set ?

Question Number : 89 Question Id : 91394310783 Question Type : MCQ Option Shuffling : Yes Display Question Number : Yes Single Line Question Option : No Option Orientation : Vertical

Correct Marks : 2 Wrong Marks : 0

Consider the following grammar G :

$S \rightarrow A \mid B$

$A \rightarrow a \mid c$

$B \rightarrow b \mid c$

where {S, A, B} is the set of non-terminals, {a, b, c} is the set of terminals.

Which of the following statement(s) is/are correct ?

S_1 : LR(1) can parse all strings that are generated using grammar G.

S_2 : LL(1) can parse all strings that are generated using grammar G.

Choose the correct answer from the code given below :

Code :

Options :

1. Only S_1

2. Only S_2

3. Both S_1 and S_2

4. Neither S_1 nor S_2

ITA UGC NET YANI NIMI G NET

Question Number : 89 Question Id : 91394310783 Question Type : MCQ Option Shuffling : Yes Display Question Number : Yes Single Line Question Option : No Option Orientation : Vertical

Correct Marks : 2 Wrong Marks : 0

Consider the following grammar G :

$S \rightarrow A \mid B$

$A \rightarrow a \mid c$

$B \rightarrow b \mid c$

where {S, A, B} is the set of non-terminals, {a, b, c} is the set of terminals.

Which of the following statement(s) is/are correct ?

S_1 : LR(1) can parse all strings that are generated using grammar G.

S_2 : LL(1) can parse all strings that are generated using grammar G.

Choose the correct answer from the code given below :

Code :

Options :

1. Only S_1

2. Only S_2

3. Both S_1 and S_2

4. Neither S_1 nor S_2

Question Number : 90 Question Id : 91394310784 Question Type : MCQ Option Shuffling : Yes Display Question Number : Yes Single Line Question Option : No Option Orientation : Vertical

Correct Marks : 2 Wrong Marks : 0

The grammar $S \rightarrow (S) \mid SS \mid \varepsilon$ is ***not*** suitable for predictive parsing because the grammar is

Options :

1. Right recursive

2. Left recursive

3. Ambiguous

4. An operator grammar

Question Number : 90 Question Id : 91394310784 Question Type : MCQ Option Shuffling : Yes Display Question Number : Yes Single Line Question Option : No Option Orientation : Vertical

Correct Marks : 2 Wrong Marks : 0

NTA UGC NET YANI NIMI G NET

The grammar $S \rightarrow (S) \mid SS \mid \varepsilon$ is ***not*** suitable for predictive parsing because the grammar is

Options :

1. Right recursive

2. Left recursive

3. Ambiguous

4. An operator grammar

Question Number : 91 Question Id : 91394310785 Question Type : MCQ Option Shuffling : Yes Display Question Number : Yes Single Line Question Option : No Option Orientation : Vertical

Correct Marks : 2 Wrong Marks : 0

If the frame buffer has 10-bits per pixel and 8-bits are allocated for each of the R, G, and B components, then what would be the size of the color lookup table (LUT) ?

Options :

1. $(2^8 + 2^9)$ bytes

2. $(2^{10} + 2^8)$ bytes

3. $(2^{10} + 2^{24})$ bytes

4. $(2^{10} + 2^{11})$ bytes

Question Number : 91 Question Id : 91394310785 Question Type : MCQ Option Shuffling : Yes Display Question Number : Yes Single Line Question Option : No Option Orientation : Vertical

Correct Marks : 2 Wrong Marks : 0

If the frame buffer has 10-bits per pixel and 8-bits are allocated for each of the R, G, and B components, then what would be the size of the color lookup table (LUT) ?

Options :

1. $(2^8 + 2^9)$ bytes

2. $(2^{10} + 2^8)$ bytes

3. $(2^{10} + 2^{24})$ bytes

4. $(2^{10} + 2^{11})$ bytes

NTA UGC NET YANI NIMI G NET

Question Number : 92 Question Id : 91394310786 Question Type : MCQ Option Shuffling : Yes Display Question Number : Yes Single Line Question Option : No Option Orientation : Vertical

Correct Marks : 2 Wrong Marks : 0

Which homogeneous 2D matrix transforms the figure (a) on the left side to the figure (b) on the right ?

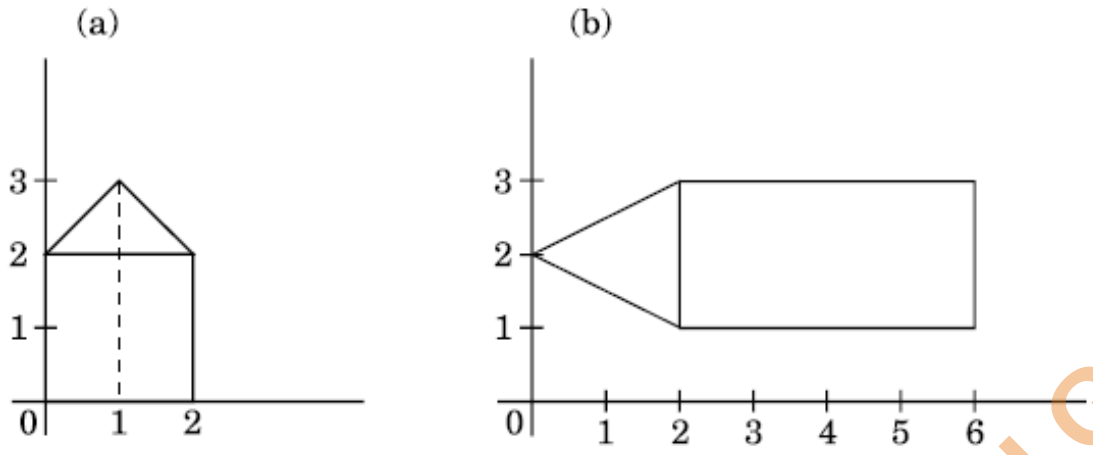

Options :

1. $\begin{pmatrix} 0 & 2 & -6 \\ 2 & 0 & 1 \\ 0 & 0 & 1 \end{pmatrix}$

2. $\begin{pmatrix} 0 & -2 & 6 \\ 1 & 0 & 1 \\ 0 & 0 & 1 \end{pmatrix}$

3. $\begin{pmatrix} 1 & -2 & 6 \\ 1 & 0 & 2 \\ 0 & 0 & 1 \end{pmatrix}$

4. $\begin{pmatrix} 0 & 2 & 6 \\ 1 & 0 & 1 \\ 0 & 0 & 1 \end{pmatrix}$

NTA UGC NET YANI NIMI G NET

Question Number : 92 Question Id : 91394310786 Question Type : MCQ Option Shuffling : Yes Display Question Number : Yes Single Line Question Option : No Option Orientation : Vertical

Correct Marks : 2 Wrong Marks : 0

Which homogeneous 2D matrix transforms the figure (a) on the left side to the figure (b) on the right ?

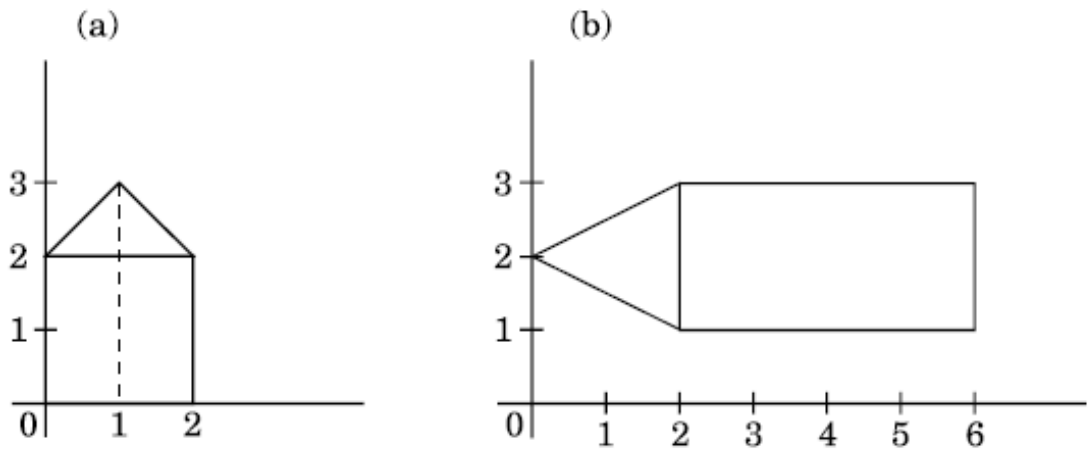

Options :

1. $\begin{pmatrix} 0 & 2 & -6 \\ 2 & 0 & 1 \\ 0 & 0 & 1 \end{pmatrix}$

2. $\begin{pmatrix} 0 & -2 & 6 \\ 1 & 0 & 1 \\ 0 & 0 & 1 \end{pmatrix}$

3. $\begin{pmatrix} 1 & -2 & 6 \\ 1 & 0 & 2 \\ 0 & 0 & 1 \end{pmatrix}$

4. $\begin{pmatrix} 0 & 2 & 6 \\ 1 & 0 & 1 \\ 0 & 0 & 1 \end{pmatrix}$

NTA UGC NET YANI NIMI G NET

Question Number : 93 Question Id : 91394310787 Question Type : MCQ Option Shuffling : Yes Display Question Number : Yes Single Line Question Option : No Option Orientation : Vertical

Correct Marks : 2 Wrong Marks : 0

Consider the midpoint (or Bresenham) algorithm for rasterizing lines given below :

```
(1)   Input (x1, y1) and (x2, y2)
(2)   y = y1
(3)   d = f(x1 + 1, y1 + 1/2) //f is the implicit form of a line
(4)   for x = x1 to x2
(5)   do
(6)       plot(x, y)
(7)       if(d < 0)
(8)       then
(9)           y = y + 1
(10)          d = d + (y1 − y2) + (x2 −x1)
(11)      else
(12)          d = d + (y1 − y2)
(13)      end
(14)  end
```

Which statements are true ?

P : For a line with slope m > 1, we should change the outer loop in line (4) to be over y.

Q : Lines (10) and (12) update the decision variable d through an incremental evaluation of the line equation f.

R : The algorithm fails if d is ever 0.

Choose the correct answer from the code given below :

Code :

Options :

1. P only

2. P and Q only

3. Q and R only

4. P, Q and R

Question Number : 93 Question Id : 91394310787 Question Type : MCQ Option Shuffling : Yes Display Question Number : Yes Single Line Question Option : No Option Orientation : Vertical

Correct Marks : 2 Wrong Marks : 0

NTA UGC NET YAN NIMI G NET

Consider the midpoint (or Bresenham) algorithm for rasterizing lines given below :

```
(1)   Input (x1, y1) and (x2, y2)
(2)   y = y1
(3)   d = f(x1 + 1, y1 + 1/2) //f is the implicit form of a line
(4)   for x = x1 to x2
(5)   do
(6)       plot(x, y)
(7)       if(d < 0)
(8)       then
(9)           y = y + 1
(10)          d = d + (y1 − y2) + (x2 −x1)
(11)      else
(12)          d = d + (y1 − y2)
(13)      end
(14)  end
```

Which statements are true ?

P : For a line with slope m > 1, we should change the outer loop in line (4) to be over y.

Q : Lines (10) and (12) update the decision variable d through an incremental evaluation of the line equation f.

R : The algorithm fails if d is ever 0.

Choose the correct answer from the code given below :

Code :

Options :

1. P only

2. P and Q only

3. Q and R only

4. P, Q and R

Question Number : 94 Question Id : 91394310788 Question Type : MCQ Option Shuffling : Yes Display Question Number : Yes Single Line Question Option : No Option Orientation : Vertical

Correct Marks : 2 Wrong Marks : 0

NTA UGC NET YAN NIMI G NET

In 3D Graphics, which of the following statements about perspective and parallel projection is/are true ?

P : In a perspective projection, the farthest an object is from the centre of projection, the smaller it appears.

Q : Parallel projection is equivalent to a perspective projection where the viewer is standing infinitely far away.

R : Perspective projections do not preserve straight lines.

Choose the correct answer from the code given below :

Code :

Options :

1. P and Q only

2. P and R only

3. Q and R only

4. P, Q and R

Question Number : 94 Question Id : 91394310788 Question Type : MCQ Option Shuffling : Yes Display Question Number : Yes Single Line Question Option : No Option Orientation : Vertical
Correct Marks : 2 Wrong Marks : 0

In 3D Graphics, which of the following statements about perspective and parallel projection is/are true ?

P : In a perspective projection, the farthest an object is from the centre of projection, the smaller it appears.

Q : Parallel projection is equivalent to a perspective projection where the viewer is standing infinitely far away.

R : Perspective projections do not preserve straight lines.

Choose the correct answer from the code given below :

Code :

Options :

1. P and Q only

2. P and R only

3. Q and R only

4. P, Q and R

NTA UGC NET YANI NIMI G NET

Question Number : 95 Question Id : 91394310789 Question Type : MCQ Option Shuffling : Yes Display Question Number : Yes Single Line Question Option : No Option Orientation : Vertical

Correct Marks : 2 Wrong Marks : 0

In 3D Graphics, which of the following statements is/are true ?

P : Back-face culling is an example of an image-precision visible-surface determination procedure.

Q : Z-buffer is a 16-bit, 32-bit, or 64-bit field associated with each pixel in a frame buffer that can be used to determine the visible surfaces at each pixel.

Choose the correct answer from the code given below :

Code :

Options :

1. P only

2. Q only

3. P and Q

4. Neither P nor Q

NTA UGC NET YANI NIMI G NET

Question Number : 95 Question Id : 91394310789 Question Type : MCQ Option Shuffling : Yes Display Question Number : Yes Single Line Question Option : No Option Orientation : Vertical

Correct Marks : 2 Wrong Marks : 0

In 3D Graphics, which of the following statements is/are true ?

P : Back-face culling is an example of an image-precision visible-surface determination procedure.

Q : Z-buffer is a 16-bit, 32-bit, or 64-bit field associated with each pixel in a frame buffer that can be used to determine the visible surfaces at each pixel.

Choose the correct answer from the code given below :

Code :

Options :

1. P only

2. Q only

3. P and Q

4. Neither P nor Q

Question Number : 96 Question Id : 91394310790 Question Type : MCQ Option Shuffling : Yes Display Question Number : Yes Single Line Question Option : No Option Orientation : Vertical

Correct Marks : 2 Wrong Marks : 0

Consider the following pseudo-code fragment, where m is a non-negative integer that has been initialized :

```
p = 0;
k = 0;
while (k < m)
    p = p + 2^k;
    k = k + 1;
end while
```

Which of the following is a loop invariant for the while statement ?
(Note : a loop invariant for a while statement is an assertion that is true each time the guard is evaluated during the execution of the while statement).

Options :

1. $p = 2^k - 1$ and $0 \le k < m$

2. $p = 2^{k+1} - 1$ and $0 \le k < m$

3. $p = 2^k - 1$ and $0 \le k \le m$

4. $p = 2^{k+1} - 1$ and $0 \le k \le m$

Question Number : 96 Question Id : 91394310790 Question Type : MCQ Option Shuffling : Yes Display Question Number : Yes Single Line Question Option : No Option Orientation : Vertical

Correct Marks : 2 Wrong Marks : 0

Consider the following pseudo-code fragment, where m is a non-negative integer that has been initialized :

```
p = 0;
k = 0;
while (k < m)
    p = p + 2^k;
    k = k + 1;
end while
```

Which of the following is a loop invariant for the while statement ?
(Note : a loop invariant for a while statement is an assertion that is true each time the guard is evaluated during the execution of the while statement).

Options :

1. $p = 2^k - 1$ and $0 \le k < m$

NTA UGC NET YANI NIMI G NET

2. $p = 2^{k+1} - 1$ and $0 \le k < m$

3. $p = 2^{k} - 1$ and $0 \le k \le m$

4. $p = 2^{k+1} - 1$ and $0 \le k \le m$

Question Number : 97 Question Id : 91394310791 Question Type : MCQ Option Shuffling : Yes Display Question Number : Yes Single Line Question Option : No Option Orientation : Vertical

Correct Marks : 2 Wrong Marks : 0

Consider the following two C++ programs P1 and P2 and two statements S1 and S2 about these programs :

P1	P2

void f (int a, int *b, int &c)
{ a = 1;
*b = 2;
c = 3;
}
int main()
{ int i = 0;
f(i, &i, i);
cout << i;
}
	double a = 1, b = 2;
	double &f(double &d)
	{ d = 4;
	return b;
	}
	int main()
	{
	f(a) = 5;
	cout << a << ":" << b;
	}

S1 : P1 prints out 3

S2 : P2 prints out 4 : 2

What can you say about the statements S1 and S2 ?

Code :

Options :

1. Only S1 is true.

2. Only S2 is true.

3. Both S1 and S2 are true.

4. Neither S1 nor S2 is true.

NTA UGC NET YANI NIMI G NET

Question Number : 97 Question Id : 91394310791 Question Type : MCQ Option Shuffling : Yes Display Question Number : Yes Single Line Question Option : No Option Orientation : Vertical

Correct Marks : 2 Wrong Marks : 0

Consider the following two C++ programs P1 and P2 and two statements S1 and S2 about these programs :

P1	P2

void f (int a, int *b, int &c)
{ a = 1;
*b = 2;
c = 3;
}
int main()
{ int i = 0;
f(i, &i, i);
cout << i;
}
	double a = 1, b = 2;
	double &f(double &d)
	{ d = 4;
	return b;
	}
	int main()
	{
	f(a) = 5;
	cout << a << ":" << b;
	}

S1 : P1 prints out 3

S2 : P2 prints out 4 : 2

What can you say about the statements S1 and S2 ?

Code :

Options :

1. Only S1 is true.

2. Only S2 is true.

3. Both S1 and S2 are true.

4. Neither S1 nor S2 is true.

Question Number : 98 Question Id : 91394310792 Question Type : MCQ Option Shuffling : Yes Display Question Number : Yes Single Line Question Option : No Option Orientation : Vertical

Correct Marks : 2 Wrong Marks : 0

NTA UGC NET YANI NIMI G NET

Consider the following recursive Java function f that takes two long arguments and returns a float value :

```
public static float f(long m, long n)
{
    float result = (float) m / (float) n;
    if (m < 0 || n < 0)
            return 0·0f;
    else
            result += f(m*2, n*3);
    return result;
}
```

Which of the following integers best approximates the value of f(2, 3) ?

Options :

1. 0

2. 1

3. 2

4. 3

Question Number : 98 Question Id : 91394310792 Question Type : MCQ Option Shuffling : Yes Display Question Number : Yes Single Line Question Option : No Option Orientation : Vertical

Correct Marks : 2 Wrong Marks : 0

Consider the following recursive Java function f that takes two long arguments and returns a float value :

```
public static float f(long m, long n)
{
    float result = (float) m / (float) n;
    if (m < 0 || n < 0)
            return 0·0f;
    else
            result += f(m*2, n*3);
    return result;
}
```

Which of the following integers best approximates the value of f(2, 3) ?

Options :

1. 0

2. 1

NTA UGC NET YANI NIMI G NET

3. 2

4. 3

Question Number : 99 Question Id : 91394310793 Question Type : MCQ Option Shuffling : Yes Display Question Number : Yes Single Line Question Option : No Option Orientation : Vertical

Correct Marks : 2 Wrong Marks : 0

What does the following Java function perform ? (Assume int occupies four bytes of storage)

```
public static int f(int a)
{   // Pre-conditions : a > 0 and no overflow/underflow occurs
    int b = 0;
    for (int i = 0;  i < 32;  i++)
    {
        b = b << 1;
        b = b | (a & 1);
        a = a >>> 1; // This is a logical shift
    }
    return b;
}
```

Options :

1. Returns the int that has the binary representation of integer a.

2. Return the int that has the reversed binary representation of integer a.

3. Return the int that represents the number of 1's in the binary representation of integer a.

4. Return the int that represents the number of 0's in the binary representation of integer a.

Question Number : 99 Question Id : 91394310793 Question Type : MCQ Option Shuffling : Yes Display Question Number : Yes Single Line Question Option : No Option Orientation : Vertical

Correct Marks : 2 Wrong Marks : 0

NITA UGC NET YANI NIMI G NET

What does the following Java function perform ? (Assume int occupies four bytes of storage)

```
public static int f(int a)
{   // Pre-conditions : a > 0 and no overflow/underflow occurs
    int b = 0;
    for (int i = 0;  i < 32;  i++)
    {
        b = b << 1;
        b = b | (a & 1);
        a = a >>> 1; // This is a logical shift
    }
    return b;
}
```

Options :

1. Returns the int that has the binary representation of integer a.

2. Return the int that has the reversed binary representation of integer a.

3. Return the int that represents the number of 1's in the binary representation of integer a.

4. Return the int that represents the number of 0's in the binary representation of integer a.

Question Number : 100 Question Id : 91394310794 Question Type : MCQ Option Shuffling : Yes Display Question Number : Yes Single Line Question Option : No Option Orientation : Vertical

Correct Marks : 2 Wrong Marks : 0

Which of the following HTML5 codes will affect the horizontal as well as vertical alignment of the table content ?

Options :

1. <td halign="middle" valign="center"> BASH </td>

2. <td align="middle" valign="center"> BASH </td>

3. <td style="horizontal-align : center; vertical-align : middle;">
BASH </td>

4. <td style="text-align : center; vertical-align : middle;"> BASH </td>

NTA UGC NET YANI NIMI G NET

Question Number : 100 Question Id : 91394310794 Question Type : MCQ Option Shuffling : Yes Display Question Number : Yes Single Line Question Option : No Option Orientation : Vertical

Correct Marks : 2 Wrong Marks : 0

Which of the following HTML5 codes will affect the horizontal as well as vertical alignment of the table content ?

Options :

1. <td halign="middle" valign="center"> BASH </td>

2. <td align="middle" valign="center"> BASH </td>

3. <td style="horizontal-align : center; vertical-align : middle;"> BASH </td>

4. <td style="text-align : center; vertical-align : middle;"> BASH </td>

Question Number : 101 Question Id : 91394310795 Question Type : MCQ Option Shuffling : Yes Display Question Number : Yes Single Line Question Option : No Option Orientation : Vertical

Correct Marks : 2 Wrong Marks : 0

Consider the C/C++ function f() given below :

```
void f(char w[])
{
    int x = strlen(w);  //length of a string
    char c;
    for (int i = 0;  i < x; i++)
    {
        c = w[i];
        w[i] = w[x-i-1];
        w[x-i-1) = c;
    }
}
```

Which of the following is the purpose of f( ) ?

Options :

1. It outputs the contents of the array in reverse order.

2. It outputs the contents of the array in the original order.

3. It outputs the contents of the array with the characters shifted over by one position.

4. It outputs the contents of the array with the characters rearranged so they are no longer recognized as the words in the original phrase.

NTA UGC NET YANI NIMI G NET

Question Number : 101 Question Id : 91394310795 Question Type : MCQ Option Shuffling : Yes Display Question Number : Yes Single Line Question Option : No Option Orientation : Vertical

Correct Marks : 2 Wrong Marks : 0

Consider the C/C++ function f() given below :

```
void f(char w[])
{
    int x = strlen(w);  //length of a string
    char c;
    for (int i = 0;  i < x; i++)
    {
        c = w[i];
        w[i] = w[x-i-1];
        w[x-i-1) = c;
    }
}
```

Which of the following is the purpose of f( ) ?

Options :

1. It outputs the contents of the array in reverse order.

2. It outputs the contents of the array in the original order.

3. It outputs the contents of the array with the characters shifted over by one position.

4. It outputs the contents of the array with the characters rearranged so they are no longer recognized as the words in the original phrase.

Question Number : 102 Question Id : 91394310796 Question Type : MCQ Option Shuffling : Yes Display Question Number : Yes Single Line Question Option : No Option Orientation : Vertical

Correct Marks : 2 Wrong Marks : 0

The Software Requirement Specification (SRS) is said to be _____ if and only if no subset of individual requirements described in it conflict with each other.

Options :

1. Correct

2. Consistent

3. Unambiguous

4. Verifiable

NTA UGC NET YANI NIMI G NET

Question Number : 102 Question Id : 91394310796 Question Type : MCQ Option Shuffling : Yes Display Question Number : Yes Single Line Question Option : No Option Orientation : Vertical

Correct Marks : 2 Wrong Marks : 0

The Software Requirement Specification (SRS) is said to be _____ if and only if no subset of individual requirements described in it conflict with each other.

Options :

1. Correct

2. Consistent

3. Unambiguous

4. Verifiable

Question Number : 103 Question Id : 91394310797 Question Type : MCQ Option Shuffling : Yes Display Question Number : Yes Single Line Question Option : No Option Orientation : Vertical
Correct Marks : 2 Wrong Marks : 0

Software products need perfective maintenance for which of the following reasons ?

Options :

1. To rectify bugs observed while the system is in use.

2. When the customers need the product to run on new platforms.

3. To support the new features that users want it to support.

4. To overcome wear and tear caused by the repeated use of the software.

Question Number : 103 Question Id : 91394310797 Question Type : MCQ Option Shuffling : Yes Display Question Number : Yes Single Line Question Option : No Option Orientation : Vertical
Correct Marks : 2 Wrong Marks : 0

Software products need perfective maintenance for which of the following reasons ?

Options :

1. To rectify bugs observed while the system is in use.

2. When the customers need the product to run on new platforms.

3. To support the new features that users want it to support.

4. To overcome wear and tear caused by the repeated use of the software.

NTA UGC NET YANI NIMI G NET

Question Number : 104 Question Id : 91394310798 Question Type : MCQ Option Shuffling : Yes Display Question Number : Yes Single Line Question Option : No Option Orientation : Vertical

Correct Marks : 2 Wrong Marks : 0

Match each UML diagram in List I to its appropriate description in List II.

	List I		List II
(a)	State Diagram	(i)	Describes how the external entities (people, devices) can interact with the system.
(b)	Use-Case Diagram	(ii)	Used to describe the static or structural view of a system.
(c)	Class Diagram	(iii)	Used to show the flow of a business process, the steps of a use-case or the logic of an object behaviour.
(d)	Activity Diagram	(iv)	Used to describe the dynamic behaviour of objects and could also be used to describe the entire system behaviour.

Code :

Options :

1. (a)–(i), (b)–(iv), (c)–(ii), (d)–(iii)

2. (a)–(iv), (b)–(ii), (c)–(i), (d)–(iii)

3. (a)–(i), (b)–(iv), (c)–(iii), (d)–(ii)

4. (a)–(iv), (b)–(i), (c)–(ii), (d)–(iii)

NTA UGC NET YANI NIMI G NET

Question Number : 104 Question Id : 91394310798 Question Type : MCQ Option Shuffling : Yes Display Question Number : Yes Single Line Question Option : No Option Orientation : Vertical

Correct Marks : 2 Wrong Marks : 0

Match each UML diagram in List I to its appropriate description in List II.

	List I		List II
(a)	State Diagram	(i)	Describes how the external entities (people, devices) can interact with the system.
(b)	Use-Case Diagram	(ii)	Used to describe the static or structural view of a system.
(c)	Class Diagram	(iii)	Used to show the flow of a business process, the steps of a use-case or the logic of an object behaviour.
(d)	Activity Diagram	(iv)	Used to describe the dynamic behaviour of objects and could also be used to describe the entire system behaviour.

Code :

Options :

1. (a)–(i), (b)–(iv), (c)–(ii), (d)–(iii)

2. (a)–(iv), (b)–(ii), (c)–(i), (d)–(iii)

3. (a)–(i), (b)–(iv), (c)–(iii), (d)–(ii)

4. (a)–(iv), (b)–(i), (c)–(ii), (d)–(iii)

Question Number : 105 Question Id : 91394310799 Question Type : MCQ Option Shuffling : Yes Display Question Number : Yes Single Line Question Option : No Option Orientation : Vertical

Correct Marks : 2 Wrong Marks : 0

Which of the following statements is/are ***false*** ?

P : The clean-room strategy to software engineering is based on the incremental software process model.

Q : The clean-room strategy to software engineering is one of the ways to overcome "unconscious" copying of copyrighted code.

Choose the correct answer from the code given below :

Code :

Options :

1. P only

2. Q only

3. Both P and Q

4. Neither P nor Q

NTA UGC NET YANI NIMI G NET

Question Number : 105 Question Id : 91394310799 Question Type : MCQ Option Shuffling : Yes Display Question Number : Yes Single Line Question Option : No Option Orientation : Vertical

Correct Marks : 2 Wrong Marks : 0

Which of the following statements is/are ***false*** ?

P : The clean-room strategy to software engineering is based on the incremental software process model.

Q : The clean-room strategy to software engineering is one of the ways to overcome "unconscious" copying of copyrighted code.

Choose the correct answer from the code given below :

Code :

Options :

1. P only

2. Q only

3. Both P and Q

4. Neither P nor Q

Question Number : 106 Question Id : 91394310800 Question Type : MCQ Option Shuffling : Yes Display Question Number : Yes Single Line Question Option : No Option Orientation : Vertical

Correct Marks : 2 Wrong Marks : 0

Consider the following method :

```
int f (int m, int n, boolean x, boolean y)
{
    int res = 0;
    if (m < 0) {res = n – m;}
    else if (x || y) {
                res = – 1;
                if (n == m) {res = 1;}
        }
        else  {res = n;}
    return res;
} /* end of f */
```

If P is the minimum number of tests to achieve full statement coverage for f(), and Q is the minimum number of tests to achieve full branch coverage for f(), then (P, Q) =

Options :

1. (3, 4)

2. (4, 3)

3. (2, 3)

4. (3, 2)

NTA UGC NET YANI NIMI G NET

Question Number : 106 Question Id : 91394310800 Question Type : MCQ Option Shuffling : Yes Display Question Number : Yes Single Line Question Option : No Option Orientation : Vertical

Correct Marks : 2 Wrong Marks : 0

Consider the following method :

```
int f (int m, int n, boolean x, boolean y)
{
    int res = 0;
    if (m < 0) {res = n − m;}
    else if (x || y) {
                res = − 1;
                if (n == m) {res = 1;}
        }
        else  {res = n;}
    return res;
} /* end of f */
```

If P is the minimum number of tests to achieve full statement coverage for f(), and Q is the minimum number of tests to achieve full branch coverage for f(), then (P, Q) =

Options :

1. (3, 4)
2. (4, 3)
3. (2, 3)
4. (3, 2)

Question Number : 107 Question Id : 91394310801 Question Type : MCQ Option Shuffling : Yes Display Question Number : Yes Single Line Question Option : No Option Orientation : Vertical

Correct Marks : 2 Wrong Marks : 0

A legacy software system has 940 modules. The latest release required that 90 of these modules be changed. In addition, 40 new modules were added and 12 old modules were removed. Compute the software maturity index for the system.

Options :

1. 0·849
2. 0·524
3. 0·725
4. 0·923

Question Number : 107 Question Id : 91394310801 Question Type : MCQ Option Shuffling : Yes Display Question Number : Yes Single Line Question Option : No Option Orientation : Vertical

NTA UGC NET YANI NIMI G NET

Correct Marks : 2 Wrong Marks : 0

A legacy software system has 940 modules. The latest release required that 90 of these modules be changed. In addition, 40 new modules were added and 12 old modules were removed. Compute the software maturity index for the system.

Options :

1. 0·849

2. 0·524

3. 0·725

4. 0·923

Question Number : 108 Question Id : 91394310802 Question Type : MCQ Option Shuffling : Yes Display Question Number : Yes Single Line Question Option : No Option Orientation : Vertical

Correct Marks : 2 Wrong Marks : 0

Which of the following statements is/are true ?

P : Software Reengineering is preferable for software products having high failure rates, having poor design and/or having poor code structure.

Q : Software Reverse Engineering is the process of analyzing software with the objective of recovering its design and requirements specification.

Choose the correct answer from the code given below :

Code :

Options :

1. P only

2. Q only

3. Both P and Q

4. Neither P nor Q

NTA UGC NET YANI NIMI G NET

Question Number : 108 Question Id : 91394310802 Question Type : MCQ Option Shuffling : Yes Display Question Number : Yes Single Line Question Option : No Option Orientation : Vertical

Correct Marks : 2 Wrong Marks : 0

Which of the following statements is/are true ?

P : Software Reengineering is preferable for software products having high failure rates, having poor design and/or having poor code structure.

Q : Software Reverse Engineering is the process of analyzing software with the objective of recovering its design and requirements specification.

Choose the correct answer from the code given below :

Code :

Options :

1. P only

2. Q only

3. Both P and Q

4. Neither P nor Q

Question Number : 109 Question Id : 91394310803 Question Type : MCQ Option Shuffling : Yes Display Question Number : Yes Single Line Question Option : No Option Orientation : Vertical

Correct Marks : 2 Wrong Marks : 0

Which of the following is ***not*** one of the principles of agile software development method ?

Options :

1. Customer involvement

2. Embrace change

3. Incremental delivery

4. Following the plan

NTA UGC NET YANI NIMI G NET

Question Number : 109 Question Id : 91394310803 Question Type : MCQ Option Shuffling : Yes Display Question Number : Yes Single Line Question Option : No Option Orientation : Vertical

Correct Marks : 2 Wrong Marks : 0

Which of the following is ***not*** one of the principles of agile software development method ?

Options :

1. Customer involvement

2. Embrace change

3. Incremental delivery

4. Following the plan

Question Number : 110 Question Id : 91394310804 Question Type : MCQ Option Shuffling : Yes Display Question Number : Yes Single Line Question Option : No Option Orientation : Vertical

Correct Marks : 2 Wrong Marks : 0

Software coupling involves dependencies among pieces of software called modules. Which of the following are correct statements with respect to module coupling ?

P : Common coupling occurs when two modules share the same global data.

Q : Control coupling occurs when modules share a composite data structure and use only parts of it.

R : Content coupling occurs when one module modifies or relies on the internal working of another module.

Choose the correct answer from the code given below :

Code :

Options :

1. P and Q only

2. P and R only

3. Q and R only

4. All of P, Q and R

NTA UGC NET YANI NIMI G NET

Question Number : 110 Question Id : 91394310804 Question Type : MCQ Option Shuffling : Yes Display Question Number : Yes Single Line Question Option : No Option Orientation : Vertical

Correct Marks : 2 Wrong Marks : 0

Software coupling involves dependencies among pieces of software called modules. Which of the following are correct statements with respect to module coupling ?

P : Common coupling occurs when two modules share the same global data.

Q : Control coupling occurs when modules share a composite data structure and use only parts of it.

R : Content coupling occurs when one module modifies or relies on the internal working of another module.

Choose the correct answer from the code given below :

Code :

Options :

1. P and Q only

2. P and R only

3. Q and R only

4. All of P, Q and R

Question Number : 111 Question Id : 91394310805 Question Type : MCQ Option Shuffling : Yes Display Question Number : Yes Single Line Question Option : No Option Orientation : Vertical

Correct Marks : 2 Wrong Marks : 0

Match the following Secret Key Algorithms (List I) with the Corresponding Key Lengths (List II) and choose the correct answer from the code given below.

	List I		List II
(a)	Blowfish	(i)	128 – 256 bits
(b)	DES	(ii)	128 bits
(c)	IDEA	(iii)	1 – 448 bits
(d)	RC5	(iv)	56 bits

Code :

Options :

1. (a)–(iv), (b)–(iii), (c)–(ii), (d)–(i)

2. (a)–(iii), (b)–(iv), (c)–(i), (d)–(ii)

3. (a)–(iii), (b)–(iv), (c)–(ii), (d)–(i)

4. (a)–(ii), (b)–(iii), (c)–(iv), (d)–(i)

NTA UGC NET YANI NIMI G NET

Question Number : 111 Question Id : 91394310805 Question Type : MCQ Option Shuffling : Yes Display Question Number : Yes Single Line Question Option : No Option Orientation : Vertical

Correct Marks : 2 Wrong Marks : 0

Match the following Secret Key Algorithms (List I) with the Corresponding Key Lengths (List II) and choose the correct answer from the code given below.

	List I		List II
(a)	Blowfish	(i)	128 – 256 bits
(b)	DES	(ii)	128 bits
(c)	IDEA	(iii)	1 – 448 bits
(d)	RC5	(iv)	56 bits

Code :

Options :

1. (a)–(iv), (b)–(iii), (c)–(ii), (d)–(i)

2. (a)–(iii), (b)–(iv), (c)–(i), (d)–(ii)

3. (a)–(iii), (b)–(iv), (c)–(ii), (d)–(i)

4. (a)–(ii), (b)–(iii), (c)–(iv), (d)–(i)

Question Number : 112 Question Id : 91394310806 Question Type : MCQ Option Shuffling : Yes Display Question Number : Yes Single Line Question Option : No Option Orientation : Vertical

Correct Marks : 2 Wrong Marks : 0

The four byte IP Address consists of

Options :

1. Network Address

2. Host Address

3. Both Network and Host Addresses

4. Neither Network nor Host Address

Question Number : 112 Question Id : 91394310806 Question Type : MCQ Option Shuffling : Yes Display Question Number : Yes Single Line Question Option : No Option Orientation : Vertical

Correct Marks : 2 Wrong Marks : 0

The four byte IP Address consists of

Options :

1. Network Address

2. Host Address

3. Both Network and Host Addresses

4. Neither Network nor Host Address

NTA UGC NET YANI NIMI G NET

Question Number : 113 Question Id : 91394310807 Question Type : MCQ Option Shuffling : Yes Display Question Number : Yes Single Line Question Option : No Option Orientation : Vertical

Correct Marks : 2 Wrong Marks : 0

Consider ISO-OSI network architecture reference model. Session layer of this model offers dialog control, token management and _____ as services.

Options :

1. Syncronization

2. Asyncronization

3. Flow Control

4. Errors

Question Number : 113 Question Id : 91394310807 Question Type : MCQ Option Shuffling : Yes Display Question Number : Yes Single Line Question Option : No Option Orientation : Vertical

Correct Marks : 2 Wrong Marks : 0

Consider ISO-OSI network architecture reference model. Session layer of this model offers dialog control, token management and _____ as services.

Options :

1. Syncronization

2. Asyncronization

3. Flow Control

4. Errors

Question Number : 114 Question Id : 91394310808 Question Type : MCQ Option Shuffling : Yes Display Question Number : Yes Single Line Question Option : No Option Orientation : Vertical

Correct Marks : 2 Wrong Marks : 0

Suppose a cloud contains software stack such as Operating systems, Application softwares, etc. This model is referred as _____ model.

Options :

1. SaaS

2. PaaS

3. IaaS

4. MaaS

Question Number : 114 Question Id : 91394310808 Question Type : MCQ Option Shuffling : Yes Display Question Number : Yes Single Line Question Option : No Option Orientation : Vertical

Correct Marks : 2 Wrong Marks : 0

NTA UGC NET YANI NIMI G NET

Suppose a cloud contains software stack such as Operating systems, Application softwares, etc. This model is referred as _____ model.

Options :

1. SaaS

2. PaaS

3. IaaS

4. MaaS

Question Number : 115 Question Id : 91394310809 Question Type : MCQ Option Shuffling : Yes Display Question Number : Yes Single Line Question Option : No Option Orientation : Vertical

Correct Marks : 2 Wrong Marks : 0

The Third Generation mobile phones are digital and based on

Options :

1. AMPS

2. D-AMPS

3. CDMA

4. Broadband CDMA

NTA UGC NET YANI NIMI G NET

Question Number : 115 Question Id : 91394310809 Question Type : MCQ Option Shuffling : Yes Display Question Number : Yes Single Line Question Option : No Option Orientation : Vertical

Correct Marks : 2 Wrong Marks : 0

The Third Generation mobile phones are digital and based on

Options :

1. AMPS

2. D-AMPS

3. CDMA

4. Broadband CDMA

Question Number : 116 Question Id : 91394310810 Question Type : MCQ Option Shuffling : Yes Display Question Number : Yes Single Line Question Option : No Option Orientation : Vertical

Correct Marks : 2 Wrong Marks : 0

Which of the following statement/s is/are *true* ?

(i) Firewalls can screen traffic going into or out of an organization.

(ii) Virtual private networks can simulate an old leased network to provide certain desirable properties.

Choose the correct answer from the code given below :

Code :

Options :

1. (i) only

2. (ii) only

3. Both (i) and (ii)

4. Neither (i) nor (ii)

Question Number : 116 Question Id : 91394310810 Question Type : MCQ Option Shuffling : Yes Display Question Number : Yes Single Line Question Option : No Option Orientation : Vertical

Correct Marks : 2 Wrong Marks : 0

Which of the following statement/s is/are *true* ?

(i) Firewalls can screen traffic going into or out of an organization.

(ii) Virtual private networks can simulate an old leased network to provide certain desirable properties.

Choose the correct answer from the code given below :

Code :

Options :

1. (i) only

2. (ii) only

3. Both (i) and (ii)

4. Neither (i) nor (ii)

Question Number : 117 Question Id : 91394310811 Question Type : MCQ Option Shuffling : Yes Display Question Number : Yes Single Line Question Option : No Option Orientation : Vertical

Correct Marks : 2 Wrong Marks : 0

NTA UGC NET YANI NIMI G NET

Which of the following statement/s is/are *true* ?

(i) Windows XP supports both peer-peer and client-server networks.

(ii) Windows XP implements Transport protocols as drivers that can be loaded and unloaded from the system dynamically.

Choose the correct answer from the code given below :

Code :

Options :

1. (i) only

2. (ii) only

3. Neither (i) nor (ii)

4. Both (i) and (ii)

Question Number : 117 Question Id : 91394310811 Question Type : MCQ Option Shuffling : Yes Display Question Number : Yes Single Line Question Option : No Option Orientation : Vertical

Correct Marks : 2 Wrong Marks : 0

Which of the following statement/s is/are *true* ?

(i) Windows XP supports both peer-peer and client-server networks.

(ii) Windows XP implements Transport protocols as drivers that can be loaded and unloaded from the system dynamically.

Choose the correct answer from the code given below :

Code :

Options :

1. (i) only

2. (ii) only

3. Neither (i) nor (ii)

4. Both (i) and (ii)

Question Number : 118 Question Id : 91394310812 Question Type : MCQ Option Shuffling : Yes Display Question Number : Yes Single Line Question Option : No Option Orientation : Vertical

Correct Marks : 2 Wrong Marks : 0

In Linux operating system environment _____ command is used to print a file.

Options :

NTA UGC NET YANI NIMI G NET

1. print

2. ptr

3. pr

4. lpr

Question Number : 118 Question Id : 91394310812 Question Type : MCQ Option Shuffling : Yes Display Question Number : Yes Single Line Question Option : No Option Orientation : Vertical

Correct Marks : 2 Wrong Marks : 0

In Linux operating system environment _____ command is used to print a file.

Options :

1. print

2. ptr

3. pr

4. lpr

Question Number : 119 Question Id : 91394310813 Question Type : MCQ Option Shuffling : Yes Display Question Number : Yes Single Line Question Option : No Option Orientation : Vertical

Correct Marks : 2 Wrong Marks : 0

To overcome difficulties in Readers–Writers problem, which of the following statement/s is/are *true* ?

(i) Writers are given exclusive access to shared objects.

(ii) Readers are given exclusive access to shared objects.

(iii) Both Readers and Writers are given exclusive access to shared objects.

Choose the correct answer from the code given below :

Code :

Options :

1. (i) only

2. (ii) only

3. (iii) only

NTA UGC NET YANI NIMI G NET

4. Both (ii) and (iii)

Question Number : 119 Question Id : 91394310813 Question Type : MCQ Option Shuffling : Yes Display Question Number : Yes Single Line Question Option : No Option Orientation : Vertical

Correct Marks : 2 Wrong Marks : 0

To overcome difficulties in Readers–Writers problem, which of the following statement/s is/are *true* ?

(i) Writers are given exclusive access to shared objects.

(ii) Readers are given exclusive access to shared objects.

(iii) Both Readers and Writers are given exclusive access to shared objects.

Choose the correct answer from the code given below :

Code :

Options :

1. (i) only

2. (ii) only

3. (iii) only

4. Both (ii) and (iii)

Question Number : 120 Question Id : 91394310814 Question Type : MCQ Option Shuffling : Yes Display Question Number : Yes Single Line Question Option : No Option Orientation : Vertical

Correct Marks : 2 Wrong Marks : 0

Suppose a system has 12 instances of some resource with n processes competing for that resource. Each process may require 4 instances of the resource. The maximum value of n for which the system never enters into deadlock is

Options :

1. 3

2. 4

3. 5

4. 6

Question Number : 120 Question Id : 91394310814 Question Type : MCQ Option Shuffling : Yes Display Question Number : Yes Single Line Question Option : No Option Orientation : Vertical

Correct Marks : 2 Wrong Marks : 0

NTA UGC NET YANI NIMI G NET

Suppose a system has 12 instances of some resource with n processes competing for that resource. Each process may require 4 instances of the resource. The maximum value of n for which the system never enters into deadlock is

Options :

1. 3

2. 4

3. 5

4. 6

Question Number : 121 Question Id : 91394310815 Question Type : MCQ Option Shuffling : Yes Display Question Number : Yes Single Line Question Option : No Option Orientation : Vertical

Correct Marks : 2 Wrong Marks : 0

Dirty bit is used to show the

Options :

1. wrong page

2. page with corrupted data

3. page with low frequency occurrence

4. page that is modified after being loaded into cache memory

Question Number : 121 Question Id : 91394310815 Question Type : MCQ Option Shuffling : Yes Display Question Number : Yes Single Line Question Option : No Option Orientation : Vertical

Correct Marks : 2 Wrong Marks : 0

Dirty bit is used to show the

Options :

1. wrong page

2. page with corrupted data

3. page with low frequency occurrence

4. page that is modified after being loaded into cache memory

NTA UGC NET YANI NIMI G NET

Question Number : 122 Question Id : 91394310816 Question Type : MCQ Option Shuffling : Yes Display Question Number : Yes Single Line Question Option : No Option Orientation : Vertical

Correct Marks : 2 Wrong Marks : 0

Suppose for a process P, reference to pages in order are 1, 2, 4, 5, 2, 1, 2, 4. Assume that main memory can accomodate 3 pages and the main memory has already pages 1 and 2 in the order 1 – first, 2 – second. At this moment, assume FIFO Page Replacement Algorithm is used then the number of page faults that occur to complete the execution of process P is

Options :

1. 4

2. 3

3. 5

4. 6

Question Number : 122 Question Id : 91394310816 Question Type : MCQ Option Shuffling : Yes Display Question Number : Yes Single Line Question Option : No Option Orientation : Vertical

Correct Marks : 2 Wrong Marks : 0

Suppose for a process P, reference to pages in order are 1, 2, 4, 5, 2, 1, 2, 4. Assume that main memory can accomodate 3 pages and the main memory has already pages 1 and 2 in the order 1 – first, 2 – second. At this moment, assume FIFO Page Replacement Algorithm is used then the number of page faults that occur to complete the execution of process P is

Options :

1. 4

2. 3

3. 5

4. 6

NTA UGC NET YAMI NIMI G NET

Question Number : 123 Question Id : 91394310817 Question Type : MCQ Option Shuffling : Yes Display Question Number : Yes Single Line Question Option : No Option Orientation : Vertical

Correct Marks : 2 Wrong Marks : 0

Consider the following set of processes and the length of CPU burst time given in milliseconds :

Process	CPU Burst time (ms)
P_1	5
P_2	7
P_3	6
P_4	4

Assume that processes being scheduled with Round-Robin Scheduling Algorithm with time quantum 4 ms. Then the waiting time for P_4 is _____ ms.

Options :

1. 0
2. 4
3. 12
4. 6

NTA UGC NET YANI NIMI G NET

Question Number : 123 Question Id : 91394310817 Question Type : MCQ Option Shuffling : Yes Display Question Number : Yes Single Line Question Option : No Option Orientation : Vertical

Correct Marks : 2 Wrong Marks : 0

Consider the following set of processes and the length of CPU burst time given in milliseconds :

Process	CPU Burst time (ms)
P_1	5
P_2	7
P_3	6
P_4	4

Assume that processes being scheduled with Round-Robin Scheduling Algorithm with time quantum 4 ms. Then the waiting time for P_4 is _____ ms.

Options :

1. 0

2. 4

3. 12

4. 6

Question Number : 124 Question Id : 91394310818 Question Type : MCQ Option Shuffling : Yes Display Question Number : Yes Single Line Question Option : No Option Orientation : Vertical

Correct Marks : 2 Wrong Marks : 0

Suppose P, Q and R are co-operating processes satisfying Mutual Exclusion condition. Then, if the process Q is executing in its critical section then

Options :

1. Both 'P' and 'R' execute in critical section.

2. Neither 'P' nor 'R' executes in their critical section.

3. 'P' executes in critical section.

4. 'R' executes in critical section.

NTA UGC NET YANI NIMI G NET

Question Number : 124 Question Id : 91394310818 Question Type : MCQ Option Shuffling : Yes Display Question Number : Yes Single Line Question Option : No Option Orientation : Vertical

Correct Marks : 2 Wrong Marks : 0

Suppose P, Q and R are co-operating processes satisfying Mutual Exclusion condition. Then, if the process Q is executing in its critical section then

Options :

1. Both 'P' and 'R' execute in critical section.

2. Neither 'P' nor 'R' executes in their critical section.

3. 'P' executes in critical section.

4. 'R' executes in critical section.

Question Number : 125 Question Id : 91394310819 Question Type : MCQ Option Shuffling : Yes Display Question Number : Yes Single Line Question Option : No Option Orientation : Vertical

Correct Marks : 2 Wrong Marks : 0

A process residing in Main Memory and Ready and Waiting for execution, is kept on

Options :

1. Execution Queue

2. Job Queue

3. Ready Queue

4. Wait Queue

Question Number : 125 Question Id : 91394310819 Question Type : MCQ Option Shuffling : Yes Display Question Number : Yes Single Line Question Option : No Option Orientation : Vertical

Correct Marks : 2 Wrong Marks : 0

A process residing in Main Memory and Ready and Waiting for execution, is kept on

Options :

1. Execution Queue

2. Job Queue

3. Ready Queue

4. Wait Queue

Question Number : 126 Question Id : 91394310820 Question Type : MCQ Option Shuffling : Yes Display Question Number : Yes Single Line Question Option : No Option Orientation : Vertical

Correct Marks : 2 Wrong Marks : 0

_____ system call creates new process in Unix.

Options :

1. create

2. create new

3. fork

4. fork new

Question Number : 126 Question Id : 91394310820 Question Type : MCQ Option Shuffling : Yes Display Question Number : Yes Single Line Question Option : No Option Orientation : Vertical

NTA UGC NET YANI NIMI G NET

Correct Marks : 2 Wrong Marks : 0

_____ system call creates new process in Unix.

Options :

1. create

2. create new

3. fork

4. fork new

Question Number : 127 Question Id : 91394310821 Question Type : MCQ Option Shuffling : Yes Display Question Number : Yes Single Line Question Option : No Option Orientation : Vertical

Correct Marks : 2 Wrong Marks : 0

An attribute A of datatype varchar(20) has the value 'xyz', and the attribute B of datatype char(20) has the value "lmnop", then the attribute A has _____ spaces and attribute B has _____ spaces.

Options :

1. 3, 5

2. 20, 20

3. 3, 20

4. 20, 5

NTA UGC NET YANI NIMI G NET

Question Number : 127 Question Id : 91394310821 Question Type : MCQ Option Shuffling : Yes Display Question Number : Yes Single Line Question Option : No Option Orientation : Vertical

Correct Marks : 2 Wrong Marks : 0

An attribute A of datatype varchar(20) has the value 'xyz', and the attribute B of datatype char(20) has the value "lmnop", then the attribute A has _____ spaces and attribute B has _____ spaces.

Options :

1. 3, 5

2. 20, 20

3. 3, 20

4. 20, 5

Question Number : 128 Question Id : 91394310822 Question Type : MCQ Option Shuffling : Yes Display Question Number : Yes Single Line Question Option : No Option Orientation : Vertical

Correct Marks : 2 Wrong Marks : 0

Data warehouse contains _____ data that is never found in operational environment.

Options :

1. Summary

2. Encoded

3. Encrypted

4. Scripted

Question Number : 128 Question Id : 91394310822 Question Type : MCQ Option Shuffling : Yes Display Question Number : Yes Single Line Question Option : No Option Orientation : Vertical

Correct Marks : 2 Wrong Marks : 0

Data warehouse contains _____ data that is never found in operational environment.

Options :

1. Summary

2. Encoded

3. Encrypted

4. Scripted

NTA UGC NET YANI NIMI G NET

Question Number : 129 Question Id : 91394310823 Question Type : MCQ Option Shuffling : Yes Display Question Number : Yes Single Line Question Option : No Option Orientation : Vertical

Correct Marks : 2 Wrong Marks : 0

_____ command is used to remove a relation from an SQL database.

Options :

1. Drop table

2. Delete table

3. Remove table

4. Update table

Question Number : 129 Question Id : 91394310823 Question Type : MCQ Option Shuffling : Yes Display Question Number : Yes Single Line Question Option : No Option Orientation : Vertical

Correct Marks : 2 Wrong Marks : 0

_____ command is used to remove a relation from an SQL database.

Options :

1. Drop table

2. Delete table

3. Remove table

4. Update table

Question Number : 130 Question Id : 91394310824 Question Type : MCQ Option Shuffling : Yes Display Question Number : Yes Single Line Question Option : No Option Orientation : Vertical

Correct Marks : 2 Wrong Marks : 0

Which of the following statement/s is/are true ?

(i) Facebook has the world's largest Hadoop Cluster.

(ii) Hadoop 2·0 allows live stream processing of Real time data.

Choose the correct answer from the code given below :

Code :

Options :

1. (i) only

2. (ii) only

3. Both (i) and (ii)

4. Neither (i) nor (ii)

NTA UGC NET YANI NIMI G NET

Question Number : 130 Question Id : 91394310824 Question Type : MCQ Option Shuffling : Yes Display Question Number : Yes Single Line Question Option : No Option Orientation : Vertical

Correct Marks : 2 Wrong Marks : 0

Which of the following statement/s is/are true ?

(i) Facebook has the world's largest Hadoop Cluster.

(ii) Hadoop 2·0 allows live stream processing of Real time data.

Choose the correct answer from the code given below :

Code :

Options :

1. (i) only

2. (ii) only

3. Both (i) and (ii)

4. Neither (i) nor (ii)

Question Number : 131 Question Id : 91394310825 Question Type : MCQ Option Shuffling : Yes Display Question Number : Yes Single Line Question Option : No Option Orientation : Vertical

Correct Marks : 2 Wrong Marks : 0

Data scrubbing is

Options :

1. A process to reject data from the data warehouse and to create the necessary indexes.

2. A process to load the data in the data warehouse and to create the necessary indexes.

3. A process to upgrade the quality of data after it is moved into a data warehouse.

4. A process to upgrade the quality of data before it is moved into a data warehouse.

ITA UGC NET YANI NIMI G NET

Question Number : 131 Question Id : 91394310825 Question Type : MCQ Option Shuffling : Yes Display Question Number : Yes Single Line Question Option : No Option Orientation : Vertical

Correct Marks : 2 Wrong Marks : 0

Data scrubbing is

Options :

1. A process to reject data from the data warehouse and to create the necessary indexes.

2. A process to load the data in the data warehouse and to create the necessary indexes.

3. A process to upgrade the quality of data after it is moved into a data warehouse.

4. A process to upgrade the quality of data before it is moved into a data warehouse.

Question Number : 132 Question Id : 91394310826 Question Type : MCQ Option Shuffling : Yes Display Question Number : Yes Single Line Question Option : No Option Orientation : Vertical

Correct Marks : 2 Wrong Marks : 0

Consider a relation schema R = (A, B, C, D, E, F) on which the following functional dependencies hold :

$A \rightarrow B$

$B, C \rightarrow D$

$E \rightarrow C$

$D \rightarrow A$

What are the candidate keys of R ?

Options :

1. AE and BE

2. AE, BE and DE

3. AEF, BEF and BCF

4. AEF, BEF and DEF

NTA UGC NET YANI NIMI G NET

Question Number : 132 Question Id : 91394310826 Question Type : MCQ Option Shuffling : Yes Display Question Number : Yes Single Line Question Option : No Option Orientation : Vertical

Correct Marks : 2 Wrong Marks : 0

Consider a relation schema R = (A, B, C, D, E, F) on which the following functional dependencies hold :

$A \rightarrow B$

$B, C \rightarrow D$

$E \rightarrow C$

$D \rightarrow A$

What are the candidate keys of R ?

Options :

1. AE and BE

2. AE, BE and DE

3. AEF, BEF and BCF

4. AEF, BEF and DEF

Question Number : 133 Question Id : 91394310827 Question Type : MCQ Option Shuffling : Yes Display Question Number : Yes Single Line Question Option : No Option Orientation : Vertical

Correct Marks : 2 Wrong Marks : 0

Consider the following sequence of two transactions on a bank account (A) with initial balance 20,000 that transfers 5,000 to another account (B) and then apply 10% interest.

(i) T1 start

(ii) T1 A old = 20,000 new 15,000

(iii) T1 B old = 12,000 new = 17,000

(iv) T1 commit

(v) T2 start

(vi) T2 A old = 15,000 new = 16,500

(vii) T2 commit

Suppose the database system crashes just before log record (vii) is written. When the system is restarted, which one statement is true of the recovery process ?

Options :

1. We must redo log record (vi) to set A to 16,500.

2. We must redo log record (vi) to set A to 16,500 and then redo log records (ii) and (iii).

3. We need not redo log records (ii) and (iii) because transaction T1 has committed.

4. We can apply redo and undo operations in arbitrary order because they are idempotent.

NTA UGC NET YAMI NIMI G NET

Question Number : 133 Question Id : 91394310827 Question Type : MCQ Option Shuffling : Yes Display Question Number : Yes Single Line Question Option : No Option Orientation : Vertical

Correct Marks : 2 Wrong Marks : 0

Consider the following sequence of two transactions on a bank account (A) with initial balance 20,000 that transfers 5,000 to another account (B) and then apply 10% interest.

(i) T1 start

(ii) T1 A old = 20,000 new 15,000

(iii) T1 B old = 12,000 new = 17,000

(iv) T1 commit

(v) T2 start

(vi) T2 A old = 15,000 new = 16,500

(vii) T2 commit

Suppose the database system crashes just before log record (vii) is written. When the system is restarted, which one statement is true of the recovery process ?

Options :

1. We must redo log record (vi) to set A to 16,500.

2. We must redo log record (vi) to set A to 16,500 and then redo log records (ii) and (iii).

3. We need not redo log records (ii) and (iii) because transaction T1 has committed.

4. We can apply redo and undo operations in arbitrary order because they are idempotent.

Question Number : 134 Question Id : 91394310828 Question Type : MCQ Option Shuffling : Yes Display Question Number : Yes Single Line Question Option : No Option Orientation : Vertical

Correct Marks : 2 Wrong Marks : 0

NTA UGC NET YANI NIMI G NET

Consider the following tables (relations) :

Students

Roll-No	Name
18CS101	Ramesh
18CS102	Mukesh
18CS103	Ramesh

Performance

Roll-No	Course	Marks
18CS101	DBMS	60
18CS101	Compiler Design	65
18CS102	DBMS	80
18CS103	DBMS	85
18CS102	Compiler Design	75
18CS103	Operating System	70

Primary keys in the tables are shown using underline. Now, consider the following query :

```
SELECT S.Name, Sum (P.Marks)
FROM Students S, Performance P
WHERE S.Roll-No = P.Roll-No
GROUP BY S.Name
```

The number of rows returned by above query is

Options :

1. 0
2. 1
3. 2
4. 3

NTA UGC NET YANI NIMI G NET

Question Number : 134 Question Id : 91394310828 Question Type : MCQ Option Shuffling : Yes Display Question Number : Yes Single Line Question Option : No Option Orientation : Vertical

Correct Marks : 2 Wrong Marks : 0

Consider the following tables (relations) :

Students

Roll-No	Name
18CS101	Ramesh
18CS102	Mukesh
18CS103	Ramesh

Performance

Roll-No	Course	Marks
18CS101	DBMS	60
18CS101	Compiler Design	65
18CS102	DBMS	80
18CS103	DBMS	85
18CS102	Compiler Design	75
18CS103	Operating System	70

Primary keys in the tables are shown using underline. Now, consider the following query :

```
SELECT S.Name, Sum (P.Marks)
FROM Students S, Performance P
WHERE S.Roll-No = P.Roll-No
GROUP BY S.Name
```

The number of rows returned by above query is

Options :

1. 0
2. 1
3. 2
4. 3

NTA UGC NET YANI NIMI G NET

Question Number : 135 Question Id : 91394310829 Question Type : MCQ Option Shuffling : Yes Display Question Number : Yes Single Line Question Option : No Option Orientation : Vertical

Correct Marks : 2 Wrong Marks : 0

A clustering index is defined on the fields which are of type

Options :

1. non-key and ordering

2. non-key and non-ordering

3. key and ordering

4. key and non-ordering

Question Number : 135 Question Id : 91394310829 Question Type : MCQ Option Shuffling : Yes Display Question Number : Yes Single Line Question Option : No Option Orientation : Vertical

Correct Marks : 2 Wrong Marks : 0

A clustering index is defined on the fields which are of type

Options :

1. non-key and ordering

2. non-key and non-ordering

3. key and ordering

4. key and non-ordering

Question Number : 136 Question Id : 91394310830 Question Type : MCQ Option Shuffling : Yes Display Question Number : Yes Single Line Question Option : No Option Orientation : Vertical

Correct Marks : 2 Wrong Marks : 0

A host is connected to a department network which is part of a university network. The university network, in turn, is part of the Internet. The largest network, in which the Ethernet address of the host is unique, is

Options :

1. the Internet

2. the university network

3. the department network

4. the subnet to which the host belongs

Question Number : 136 Question Id : 91394310830 Question Type : MCQ Option Shuffling : Yes Display Question Number : Yes Single Line Question Option : No Option Orientation : Vertical

Correct Marks : 2 Wrong Marks : 0

NTA UGC NET YANI NIMI G NET

A host is connected to a department network which is part of a university network. The university network, in turn, is part of the Internet. The largest network, in which the Ethernet address of the host is unique, is

Options :

1. the Internet

2. the university network

3. the department network

4. the subnet to which the host belongs

Question Number : 137 Question Id : 91394310831 Question Type : MCQ Option Shuffling : Yes Display Question Number : Yes Single Line Question Option : No Option Orientation : Vertical

Correct Marks : 2 Wrong Marks : 0

An Internet Service Provider (ISP) has following chunk of CIDR-based IP addresses available with it : 245.248.128.0/20. The ISP wants to give half of this chunk of addresses to organization A and a quarter to organization B while retaining the remaining with itself. Which of the following is a valid allocation of addresses to A and B ?

Options :

1. 245.248.136.0/21 and 245.248.128.0/22

2. 245.248.128.0/21 and 245.248.128.0/22

3. 245.248.132.0/22 and 245.248.132.0/21

4. 245.248.136.0/24 and 245.248.132.0/21

NTA UGC NET YANI NMI G NET

Question Number : 137 Question Id : 91394310831 Question Type : MCQ Option Shuffling : Yes Display Question Number : Yes Single Line Question Option : No Option Orientation : Vertical

Correct Marks : 2 Wrong Marks : 0

An Internet Service Provider (ISP) has following chunk of CIDR-based IP addresses available with it : 245.248.128.0/20. The ISP wants to give half of this chunk of addresses to organization A and a quarter to organization B while retaining the remaining with itself. Which of the following is a valid allocation of addresses to A and B ?

Options :

1. 245.248.136.0/21 and 245.248.128.0/22

2. 245.248.128.0/21 and 245.248.128.0/22

3. 245.248.132.0/22 and 245.248.132.0/21

4. 245.248.136.0/24 and 245.248.132.0/21

Question Number : 138 Question Id : 91394310832 Question Type : MCQ Option Shuffling : Yes Display Question Number : Yes Single Line Question Option : No Option Orientation : Vertical

Correct Marks : 2 Wrong Marks : 0

Consider the following two statements :

S1 : TCP handles both congestion and flow control

S2 : UDP handles congestion but not flow control

Which of the following options is correct with respect to the above statements (S1) and S2) ?

Choose the correct answer from the code given below :

Code :

Options :

1. Neither S1 nor S2 is correct

2. S1 is not correct but S2 is correct

3. S1 is correct but S2 is not correct

4. Both, S1 and S2 are correct

Question Number : 138 Question Id : 91394310832 Question Type : MCQ Option Shuffling : Yes Display Question Number : Yes Single Line Question Option : No Option Orientation : Vertical

Correct Marks : 2 Wrong Marks : 0

Consider the following two statements :

S1 : TCP handles both congestion and flow control

S2 : UDP handles congestion but not flow control

Which of the following options is correct with respect to the above statements (S1) and S2) ?

Choose the correct answer from the code given below :

Code :

Options :

1. Neither S1 nor S2 is correct

2. S1 is not correct but S2 is correct

3. S1 is correct but S2 is not correct

NTA UGC NET YANI NIMI G NET

4. Both, S1 and S2 are correct

Question Number : 139 Question Id : 91394310833 Question Type : MCQ Option Shuffling : Yes Display Question Number : Yes Single Line Question Option : No Option Orientation : Vertical

Correct Marks : 2 Wrong Marks : 0

Identify the correct sequence in which the following packets are transmitted on the network by a host when a browser requests a webpage from a remote server, assuming that the host has just been restarted.

Options :

1. HTTP GET request, DNS query, TCP SYN

2. DNS query, HTTP GET request, TCP SYN

3. TCP SYN, DNS query, HTTP GET request

4. DNS query, TCP SYN, HTTP GET request

Question Number : 139 Question Id : 91394310833 Question Type : MCQ Option Shuffling : Yes Display Question Number : Yes Single Line Question Option : No Option Orientation : Vertical

Correct Marks : 2 Wrong Marks : 0

Identify the correct sequence in which the following packets are transmitted on the network by a host when a browser requests a webpage from a remote server, assuming that the host has just been restarted.

Options :

1. HTTP GET request, DNS query, TCP SYN

2. DNS query, HTTP GET request, TCP SYN

3. TCP SYN, DNS query, HTTP GET request

4. DNS query, TCP SYN, HTTP GET request

NTA UGC NET YANI NIMI G NET

Question Number : 140 Question Id : 91394310834 Question Type : MCQ Option Shuffling : Yes Display Question Number : Yes Single Line Question Option : No Option Orientation : Vertical

Correct Marks : 2 Wrong Marks : 0

Suppose that everyone in a group of N people wants to communicate secretly with (N – 1) other people using symmetric key cryptographic system. The communication between any two persons should not be decodable by the others in the group. The number of keys required in the system as a whole to satisfy the confidentiality requirement is

Options :

1. N(N – 1)

2. N(N – 1)/2

3. 2N

4. $(N - 1)^2$

Question Number : 140 Question Id : 91394310834 Question Type : MCQ Option Shuffling : Yes Display Question Number : Yes Single Line Question Option : No Option Orientation : Vertical

Correct Marks : 2 Wrong Marks : 0

Suppose that everyone in a group of N people wants to communicate secretly with (N – 1) other people using symmetric key cryptographic system. The communication between any two persons should not be decodable by the others in the group. The number of keys required in the system as a whole to satisfy the confidentiality requirement is

Options :

1. N(N – 1)

2. N(N – 1)/2

3. 2N

4. $(N - 1)^2$

Question Number : 141 Question Id : 91394310835 Question Type : MCQ Option Shuffling : Yes Display Question Number : Yes Single Line Question Option : No Option Orientation : Vertical

Correct Marks : 2 Wrong Marks : 0

An agent can improve its performance by

Options :

1. Perceiving

2. Responding

3. Learning

4. Observing

Question Number : 141 Question Id : 91394310835 Question Type : MCQ Option Shuffling : Yes Display Question Number : Yes Single Line Question Option : No Option Orientation : Vertical

NTA UGC NET YANI NIMI G NET

Correct Marks : 2 Wrong Marks : 0

An agent can improve its performance by

Options :

1. Perceiving

2. Responding

3. Learning

4. Observing

Question Number : 142 Question Id : 91394310836 Question Type : MCQ Option Shuffling : Yes Display Question Number : Yes Single Line Question Option : No Option Orientation : Vertical

Correct Marks : 2 Wrong Marks : 0

Which of the following is true for *semi-dynamic* environment ?

Options :

1. The environment may change while the agent is deliberating.

2. The environment itself does not change with the passage of time but the agent's performance score does.

3. Even if the environment changes with the passage of time while deliberating, the performance score does not change.

4. Environment and performance score, both change simultaneously.

NTA UGC NET YANI NIMI G NET

Question Number : 142 Question Id : 91394310836 Question Type : MCQ Option Shuffling : Yes Display Question Number : Yes Single Line Question Option : No Option Orientation : Vertical

Correct Marks : 2 Wrong Marks : 0

Which of the following is true for *semi-dynamic* environment ?

Options :

1. The environment may change while the agent is deliberating.

2. The environment itself does not change with the passage of time but the agent's performance score does.

3. Even if the environment changes with the passage of time while deliberating, the performance score does not change.

4. Environment and performance score, both change simultaneously.

Question Number : 143 Question Id : 91394310837 Question Type : MCQ Option Shuffling : Yes Display Question Number : Yes Single Line Question Option : No Option Orientation : Vertical

Correct Marks : 2 Wrong Marks : 0

Consider the following terminology and match List I with List II and choose the correct answer from the code given below.

b = branching factor

d = depth of the shallowest solution

m = Maximum depth of the search tree

l = depth limit

	List I (Algorithms)		**List II (Space Complexity)**
(a)	BFS search	(i)	O(bd)
(b)	DFS search	(ii)	$O(b^d)$
(c)	Depth-limited search	(iii)	O(bm)
(d)	Iterative deepening search	(iv)	O(bl)

Code :

Options :

1. (a)–(i), (b)–(ii), (c)–(iv), (d)–(iii)

2. (a)–(ii), (b)–(iii), (c)–(iv), (d)–(i)

3. (a)–(iii), (b)–(ii), (c)–(iv), (d)–(i)

4. (a)–(i), (b)–(iii), (c)–(iv), (d)–(ii)

Question Number : 143 Question Id : 91394310837 Question Type : MCQ Option Shuffling : Yes Display Question Number : Yes Single Line Question Option : No Option Orientation : Vertical

Correct Marks : 2 Wrong Marks : 0

NTA UGC NET YANI NIMI G NET

Consider the following terminology and match List I with List II and choose the correct answer from the code given below.

b = branching factor

d = depth of the shallowest solution

m = Maximum depth of the search tree

l = depth limit

	List I (Algorithms)		**List II (Space Complexity)**
(a)	BFS search	(i)	O(bd)
(b)	DFS search	(ii)	$O(b^d)$
(c)	Depth-limited search	(iii)	O(bm)
(d)	Iterative deepening search	(iv)	O(bl)

Code :

Options :

1. (a)–(i), (b)–(ii), (c)–(iv), (d)–(iii)

2. (a)–(ii), (b)–(iii), (c)–(iv), (d)–(i)

3. (a)–(iii), (b)–(ii), (c)–(iv), (d)–(i)

4. (a)–(i), (b)–(iii), (c)–(iv), (d)–(ii)

Question Number : 144 Question Id : 91394310838 Question Type : MCQ Option Shuffling : Yes Display Question Number : Yes Single Line Question Option : No Option Orientation : Vertical

Correct Marks : 2 Wrong Marks : 0

Match List I with List II and choose the correct answer from the code given below.

	List I		**List II**
(a)	Greedy Best-First Search	(i)	Selects a node for expansion if optimal path to that node has been found.
(b)	A* Search	(ii)	Avoids substantial overhead associated with keeping the sorted queue of nodes.
(c)	Recursive Best-First Search	(iii)	Suffers from excessive node generation.
(d)	Iterative-deepening A* Search	(iv)	Time complexity depends on the quality of heuristic.

Code :

Options :

1. (a)–(i), (b)–(ii), (c)–(iii), (d)–(iv)

2. (a)–(iv), (b)–(i), (c)–(ii), (d)–(iii)

3. (a)–(iv), (b)–(iii), (c)–(ii), (d)–(i)

NITA UGC NET YANI NIMI G NET

4. (a)–(i), (b)–(iv), (c)–(iii), (d)–(ii)

Question Number : 144 Question Id : 91394310838 Question Type : MCQ Option Shuffling : Yes Display Question Number : Yes Single Line Question Option : No Option Orientation : Vertical

Correct Marks : 2 Wrong Marks : 0

Match List I with List II and choose the correct answer from the code given below.

List I	List II
(a) Greedy Best-First Search	(i) Selects a node for expansion if optimal path to that node has been found.
(b) A* Search	(ii) Avoids substantial overhead associated with keeping the sorted queue of nodes.
(c) Recursive Best-First Search	(iii) Suffers from excessive node generation.
(d) Iterative-deepening A* Search	(iv) Time complexity depends on the quality of heuristic.

Code :

Options :

1. (a)–(i), (b)–(ii), (c)–(iii), (d)–(iv)

2. (a)–(iv), (b)–(i), (c)–(ii), (d)–(iii)

3. (a)–(iv), (b)–(iii), (c)–(ii), (d)–(i)

4. (a)–(i), (b)–(iv), (c)–(iii), (d)–(ii)

Question Number : 145 Question Id : 91394310839 Question Type : MCQ Option Shuffling : Yes Display Question Number : Yes Single Line Question Option : No Option Orientation : Vertical

Correct Marks : 2 Wrong Marks : 0

Consider the following statements :

S1 A heuristic is admissible if it never overestimates the cost to reach the goal.

S2 A heuristic is monotonous if it follows triangle inequality property.

Which one of the following is *true* referencing the above statements ?

Choose the correct answer from the code given below :

Code :

Options :

1. Neither of the statements S1 and S2 are true.

2. Statement S1 is false but statement S2 is true.

3. Statement S1 is true but statement S2 is false.

NTA UGC NET YANI NIMI G NET

4. Both the statements S1 and S2 are true.

Question Number : 145 Question Id : 91394310839 Question Type : MCQ Option Shuffling : Yes Display Question Number : Yes Single Line Question Option : No Option Orientation : Vertical

Correct Marks : 2 Wrong Marks : 0

Consider the following statements :

S1 A heuristic is admissible if it never overestimates the cost to reach the goal.

S2 A heuristic is monotonous if it follows triangle inequality property.

Which one of the following is *true* referencing the above statements ?

Choose the correct answer from the code given below :

Code :

Options :

1. Neither of the statements S1 and S2 are true.

2. Statement S1 is false but statement S2 is true.

3. Statement S1 is true but statement S2 is false.

4. Both the statements S1 and S2 are true.

Question Number : 146 Question Id : 91394310840 Question Type : MCQ Option Shuffling : Yes Display Question Number : Yes Single Line Question Option : No Option Orientation : Vertical

Correct Marks : 2 Wrong Marks : 0

Consider the following statements related to AND-OR Search algorithm.

S1 A solution is a subtree that has a goal node at every leaf.

S2 OR nodes are analogous to the branching in a deterministic environment.

S3 AND nodes are analogous to the branching in a non-deterministic environment.

Which one of the following is true referencing the above statements ?

Choose the correct answer from the code given below :

Code :

Options :

1. S1 – False, S2 – True, S3 – True

2. S1 – True, S2 – True, S3 – False

3. S1 – True, S2 – True, S3 – True

NTA UGC NET YANI NIMI G NET

4. S1 – False, S2 – True, S3 – False

Question Number : 146 Question Id : 91394310840 Question Type : MCQ Option Shuffling : Yes Display Question Number : Yes Single Line Question Option : No Option Orientation : Vertical

Correct Marks : 2 Wrong Marks : 0

Consider the following statements related to AND-OR Search algorithm.

S1 A solution is a subtree that has a goal node at every leaf.

S2 OR nodes are analogous to the branching in a deterministic environment.

S3 AND nodes are analogous to the branching in a non-deterministic environment.

Which one of the following is true referencing the above statements ?

Choose the correct answer from the code given below :

Code :

Options :

1. S1 – False, S2 – True, S3 – True

2. S1 – True, S2 – True, S3 – False

3. S1 – True, S2 – True, S3 – True

4. S1 – False, S2 – True, S3 – False

NTA UGC NET YANI NIMI G NET

Question Number : 147 Question Id : 91394310841 Question Type : MCQ Option Shuffling : Yes Display Question Number : Yes Single Line Question Option : No Option Orientation : Vertical

Correct Marks : 2 Wrong Marks : 0

Consider the following minimax game tree search

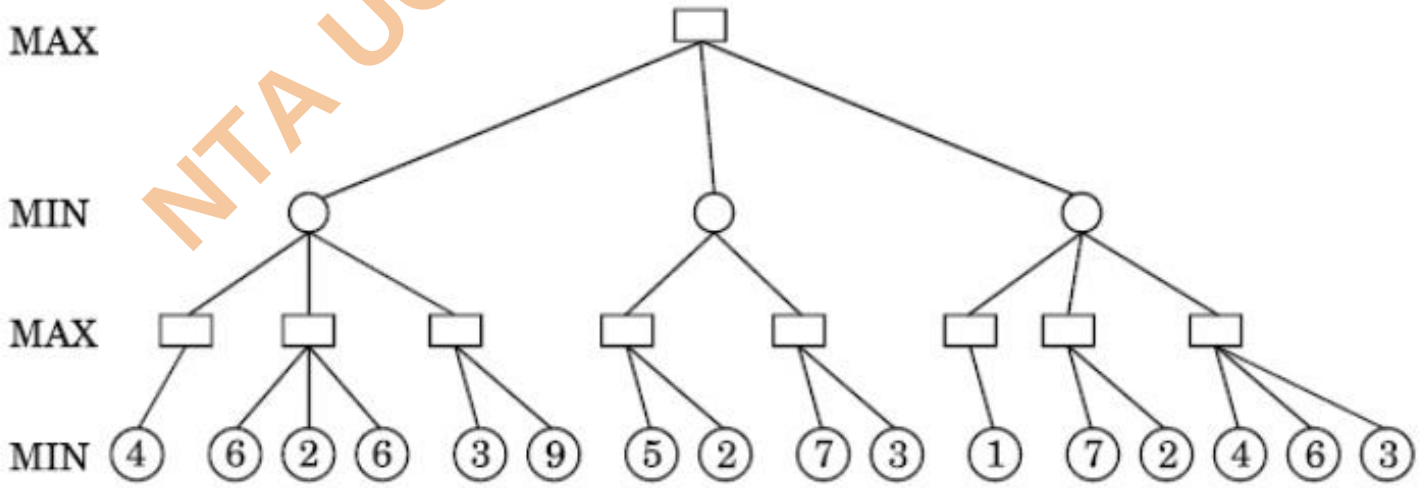

What will be the value propagated at the root ?

Options :

1. 3

2. 4

3. 5

4. 6

Question Number : 147 Question Id : 91394310841 Question Type : MCQ Option Shuffling : Yes Display Question Number : Yes Single Line Question Option : No Option Orientation : Vertical

Correct Marks : 2 Wrong Marks : 0

Consider the following minimax game tree search

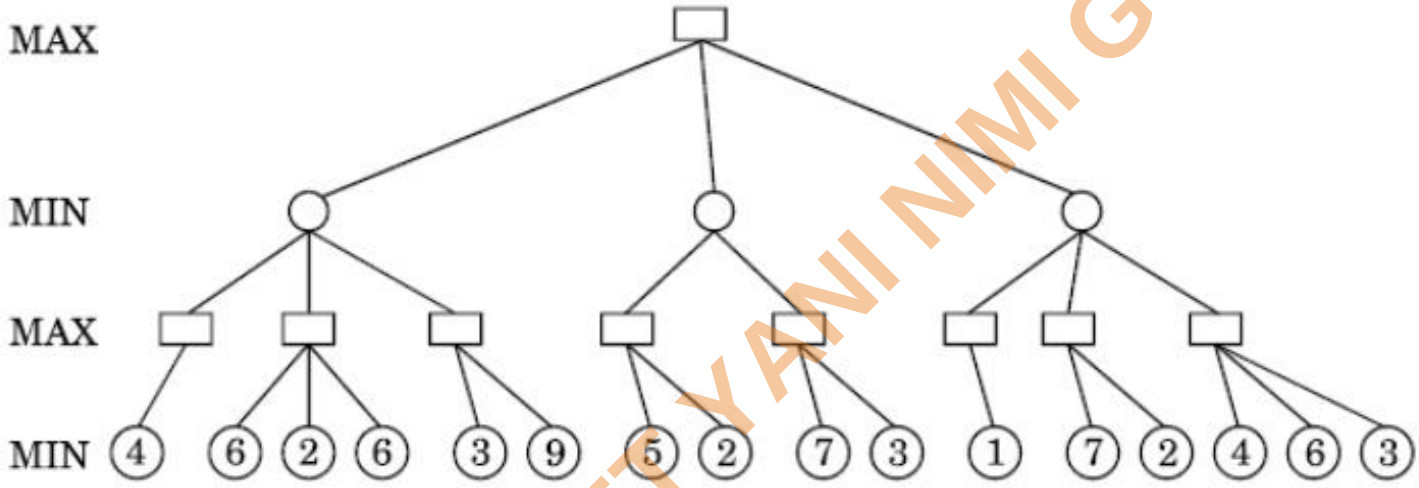

What will be the value propagated at the root ?

Options :

1. 3

2. 4

3. 5

4. 6

Question Number : 148 Question Id : 91394310842 Question Type : MCQ Option Shuffling : Yes Display Question Number : Yes Single Line Question Option : No Option Orientation : Vertical

Correct Marks : 2 Wrong Marks : 0

Consider a vocabulary with only four propositions A, B, C and D. How many models are there for the following sentence ?

$\neg A \vee \neg B \vee \neg C \vee \neg D$

NTA UGC NET YANI NIMI G NET

Options :

1. 7

2. 8

3. 15

4. 16

Question Number : 148 Question Id : 91394310842 Question Type : MCQ Option Shuffling : Yes Display Question Number : Yes Single Line Question Option : No Option Orientation : Vertical

Correct Marks : 2 Wrong Marks : 0

Consider a vocabulary with only four propositions A, B, C and D. How many models are there for the following sentence ?

$$\neg A \vee \neg B \vee \neg C \vee \neg D$$

Options :

1. 7

2. 8

3. 15

4. 16

Question Number : 149 Question Id : 91394310843 Question Type : MCQ Option Shuffling : Yes Display Question Number : Yes Single Line Question Option : No Option Orientation : Vertical

Correct Marks : 2 Wrong Marks : 0

Consider the sentence below.

"There is a country that borders both India and Nepal."

Which of the following represents the above sentence correctly ?

Options :

1. $\exists c\ \text{Country}(c) \wedge \text{Border}(c, \text{India}) \wedge \text{Border}(c, \text{Nepal})$

2. $\exists c\ \text{Country}(c) \Rightarrow [\text{Border}(c, \text{India}) \wedge \text{Border}(c, \text{Nepal})]$

3. $[\exists c\ \text{Country}(c)] \Rightarrow [\text{Border}(c, \text{India}) \wedge \text{Border}(c, \text{Nepal})]$

4. $\exists c\ \text{Border}(\text{Country}(c), \text{India} \wedge \text{Nepal})$

NITA UGC NET YANI NIMI G NET

Question Number : 149 Question Id : 91394310843 Question Type : MCQ Option Shuffling : Yes Display Question Number : Yes Single Line Question Option : No Option Orientation : Vertical

Correct Marks : 2 Wrong Marks : 0

Consider the sentence below.

"There is a country that borders both India and Nepal."

Which of the following represents the above sentence correctly ?

Options :

1. $\exists c\ Country(c) \wedge Border(c, India) \wedge Border(c, Nepal)$

2. $\exists c\ Country(c) \Rightarrow [Border(c, India) \wedge Border(c, Nepal)]$

3. $[\exists c\ Country(c)] \Rightarrow [Border(c, India) \wedge Border(c, Nepal)]$

4. $\exists c\ Border(Country(c), India \wedge Nepal)$

Question Number : 150 Question Id : 91394310844 Question Type : MCQ Option Shuffling : Yes Display Question Number : Yes Single Line Question Option : No Option Orientation : Vertical

Correct Marks : 2 Wrong Marks : 0

A full joint distribution for the Toothache, Cavity and Catch is given in the table below.

	Toothache		¬ Toothache	
	Catch	¬ Catch	Catch	¬ Catch
Cavity	0·108	0·012	0·072	0·008
¬ Cavity	0·016	0·064	0·144	0·576

What is the probability of Cavity, given evidence of Toothache ?

Options :

1. < 0·2, 0·8 >

2. < 0·4, 0·8 >

3. < 0·6, 0·8 >

4. < 0·6, 0·4 >

NTA UGC NET YANI NIMI G NET

Question Number : 150 Question Id : 91394310844 Question Type : MCQ Option Shuffling : Yes Display Question Number : Yes Single Line Question Option : No Option Orientation : Vertical

Correct Marks : 2 Wrong Marks : 0

A full joint distribution for the Toothache, Cavity and Catch is given in the table below.

	Toothache		¬ Toothache	
	Catch	¬ Catch	Catch	¬ Catch
Cavity	0·108	0·012	0·072	0·008
¬ Cavity	0·016	0·064	0·144	0·576

What is the probability of Cavity, given evidence of Toothache ?

Options :

1. **< 0·2, 0·8 >**
2. **< 0·4, 0·8 >**
3. **< 0·6, 0·8 >**
4. **< 0·6, 0·4 >**

NTA UGC NET YANI NIMI G NET