LPC11U14 – USB chipset

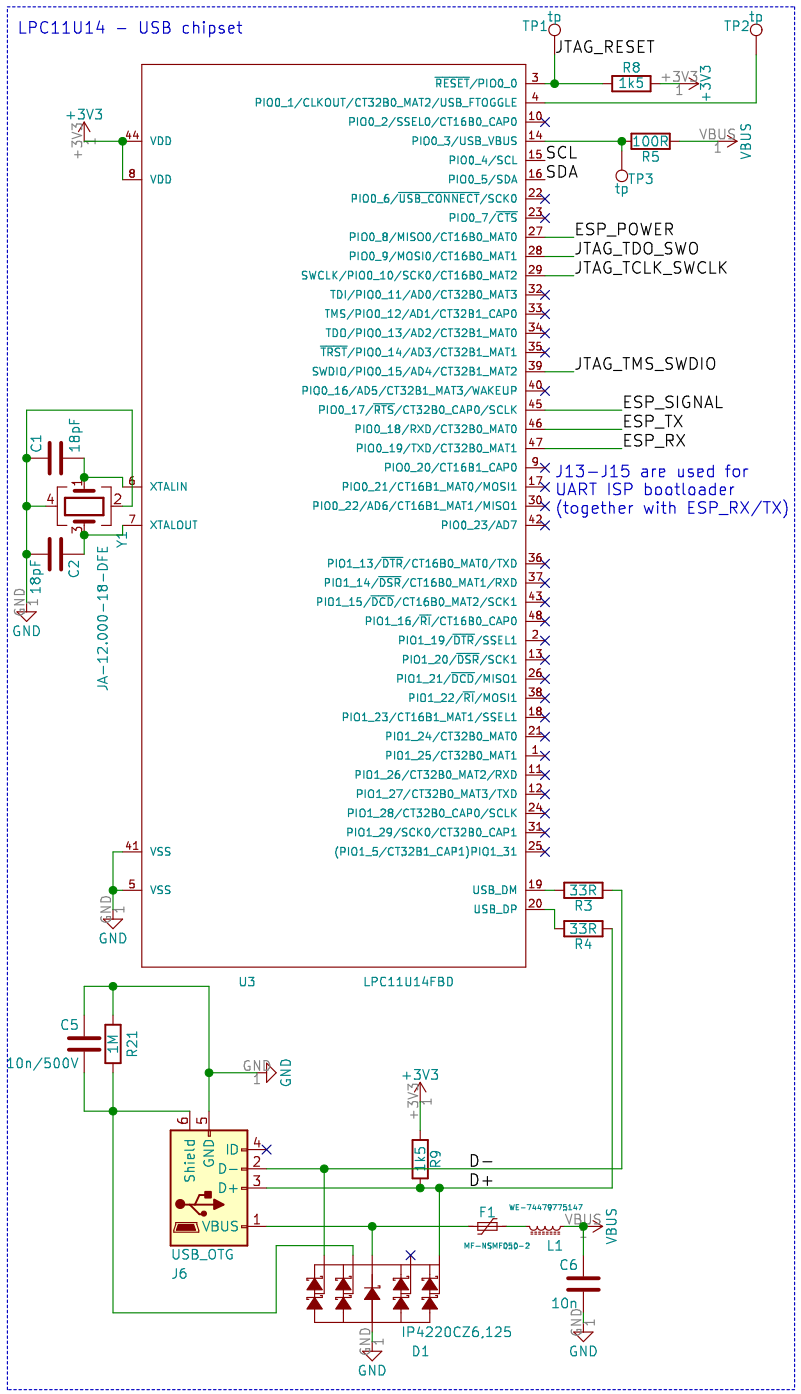

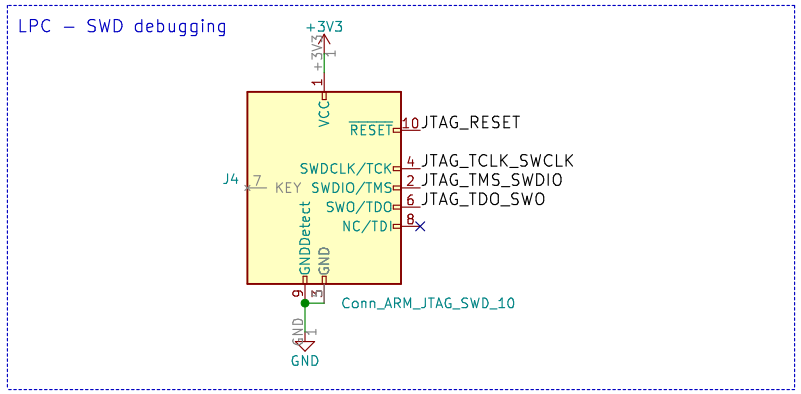

ESP32 – main processor

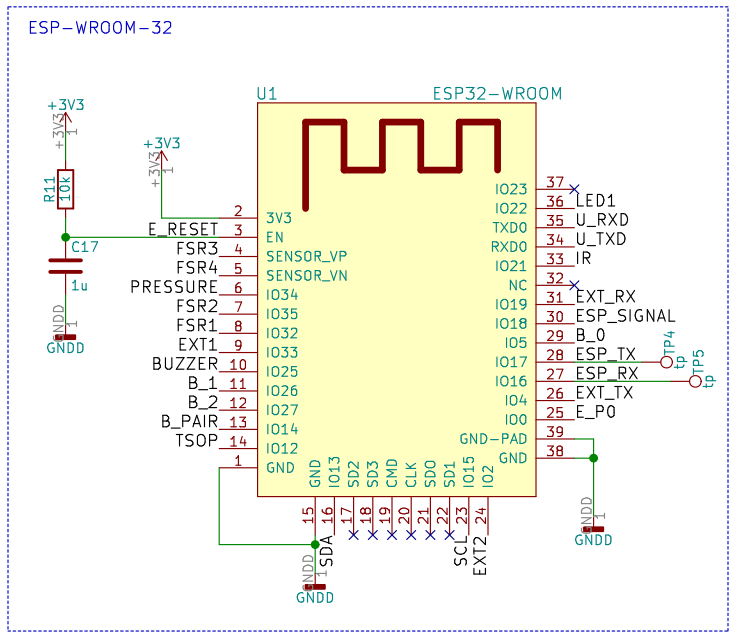

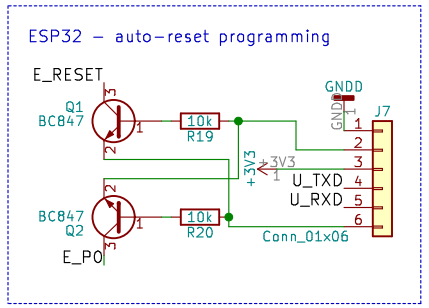

Infrared RX/TX

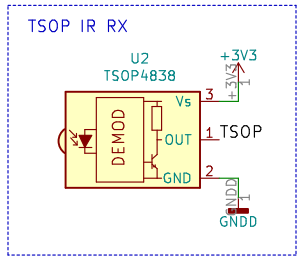

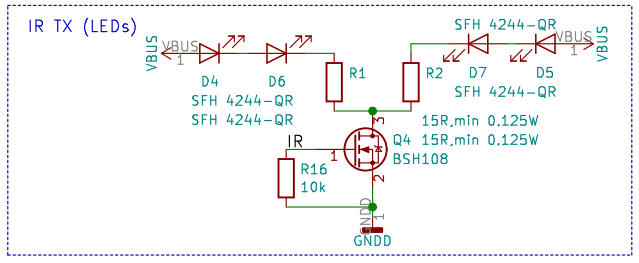

Extension / I2C

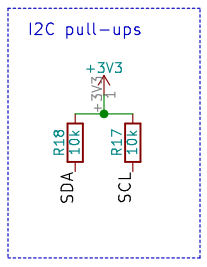

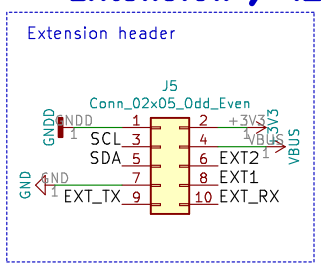

Production

FID1 Fiducial	LOGO1 Logo_FLipMouse
FID2 Fiducial	LOGO2 Logo_WEEE
FID3 Fiducial	LOGO3 Logo_CE

User Input / Output

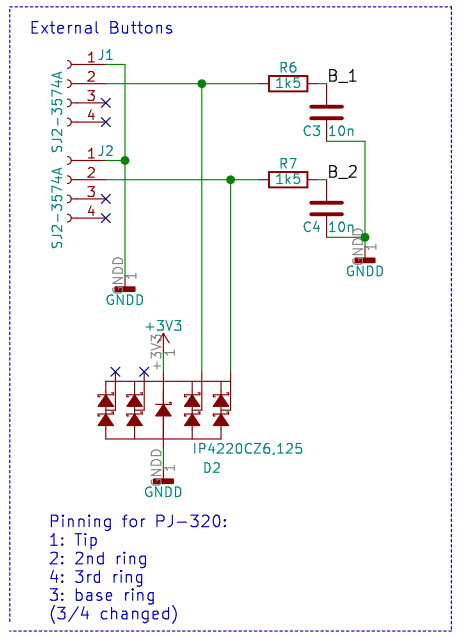

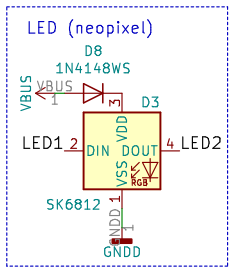

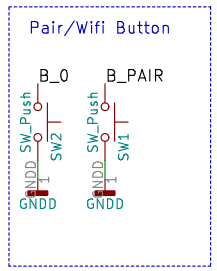

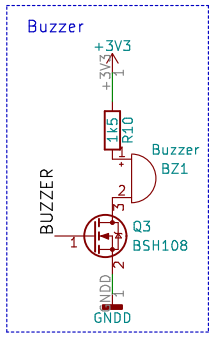

Power Supply

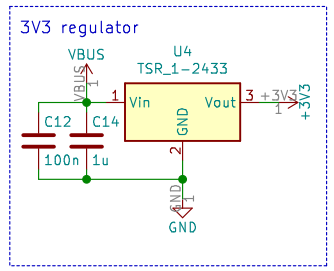

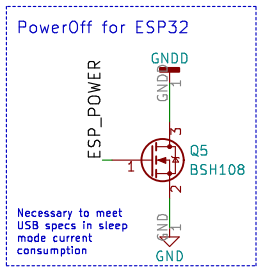

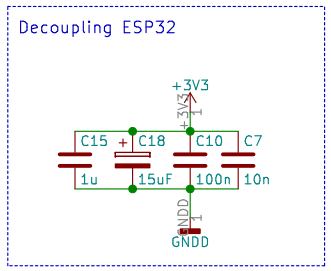

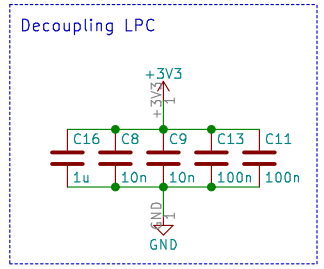

Analog Sensors

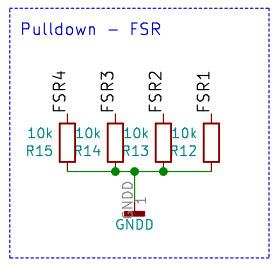

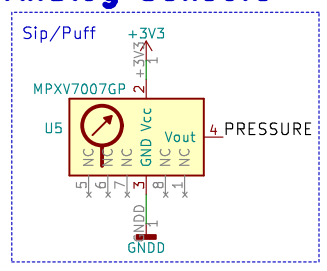

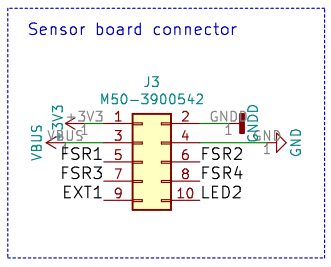

(c) Benjamin Aigner, 2018
beni@asterics-foundation.org
Art. Number: 30310200

AsTeRICS Foundation

Sheet: /
File: FLipMouse3.sch

Title: FLipMouse3

Size: A3	Date: 2018-11-15	Rev: v3.1
KiCad E.D.A. kicad 5.0.1+dfsg1-3		Id: 1/1