MCU_Sheet

File: MCU_Sheet.kicad_sch

Power_Managment_Sheet

File: Power_Managment_Sheet.kicad_sch

Sensors_Sheet

File: Sensors_Sheet.kicad_sch

MrT Stephens		
Sheet: / File: Watchy-MrT-ESP32-S3-V1.kicad_sch		
Title: Watchy-Esp32-s3		
Size: A4	Date: 2022-12-10	**Rev: V1.2**
KiCad E.D.A. kicad (6.99.0-1793-ga56955443f)		Id: 1/4

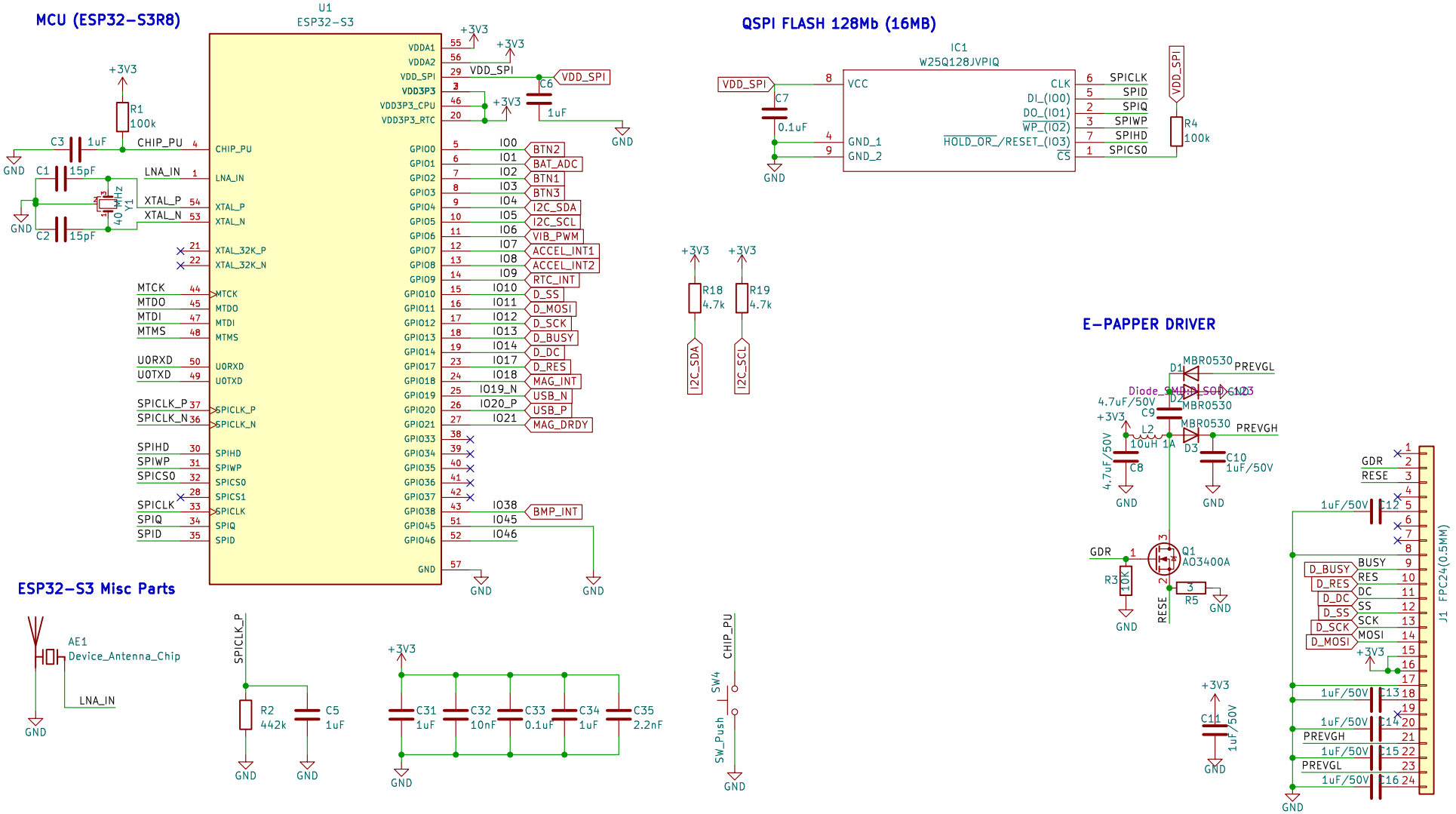

MrT Stephens

Sheet: /MCU_Sheet/

File: MCU_Sheet.kicad_sch

Title: Watchy-Esp32-s3

Size: A4	Date: 2022-12-10	**Rev: V1.2**
KiCad E.D.A. kicad (6.99.0-1793-ga56955443f)		Id: 2/4

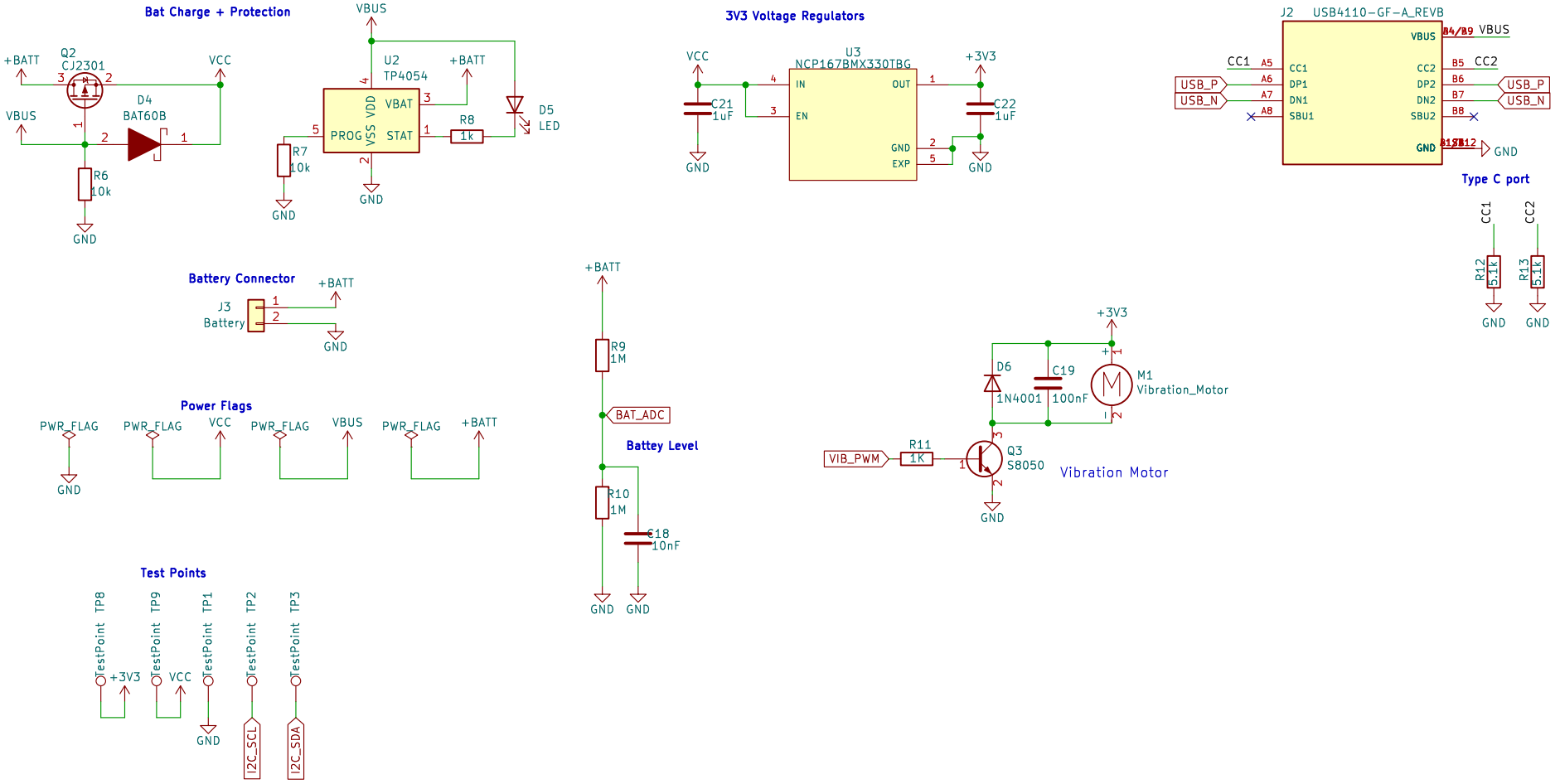

MrT Stephens		
Sheet: /Power_Managment_Sheet/		
File: Power_Managment_Sheet.kicad_sch		
Title: Watchy-Esp32-s3		
Size: A4	Date: 2022-12-10	**Rev: V1.2**
KiCad E.D.A. kicad (6.99.0-1793-ga56955443f)		Id: 3/4

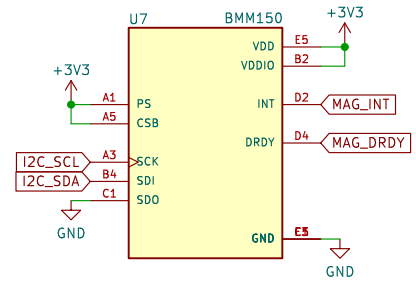

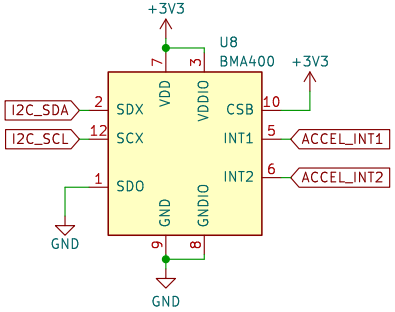

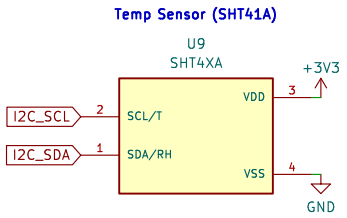

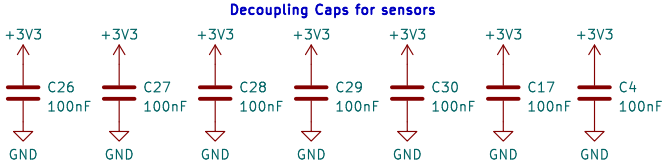

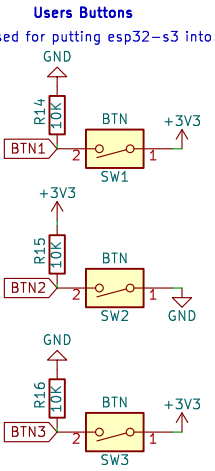

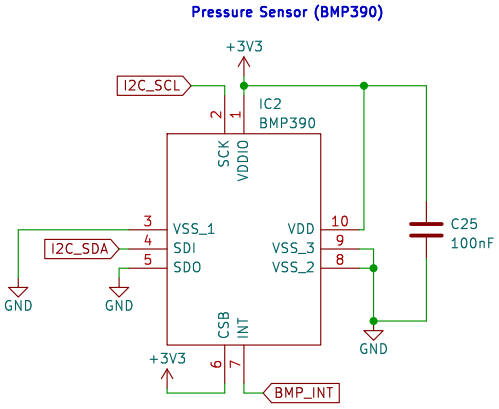

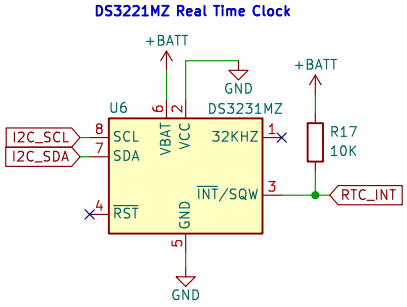

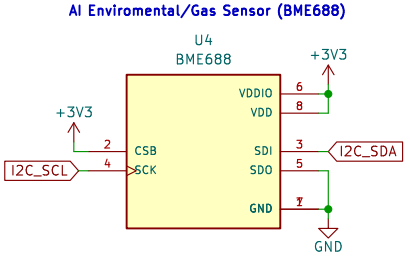

MrT Stephens		
Sheet: /Sensors_Sheet/		
File: Sensors_Sheet.kicad_sch		
Title: Watchy-Esp32-s3		
Size: A4	Date: 2022-12-10	**Rev: V1.2**
KiCad E.D.A. kicad (6.99.0-1793-ga56955443f)		Id: 4/4