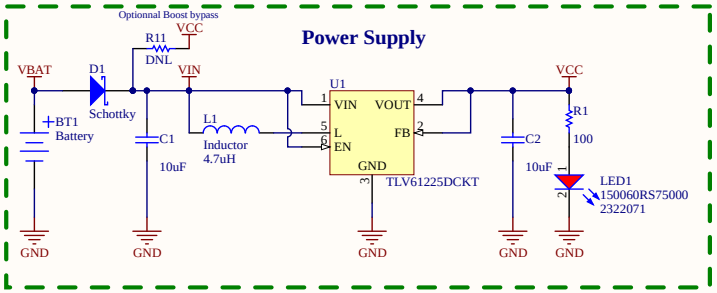

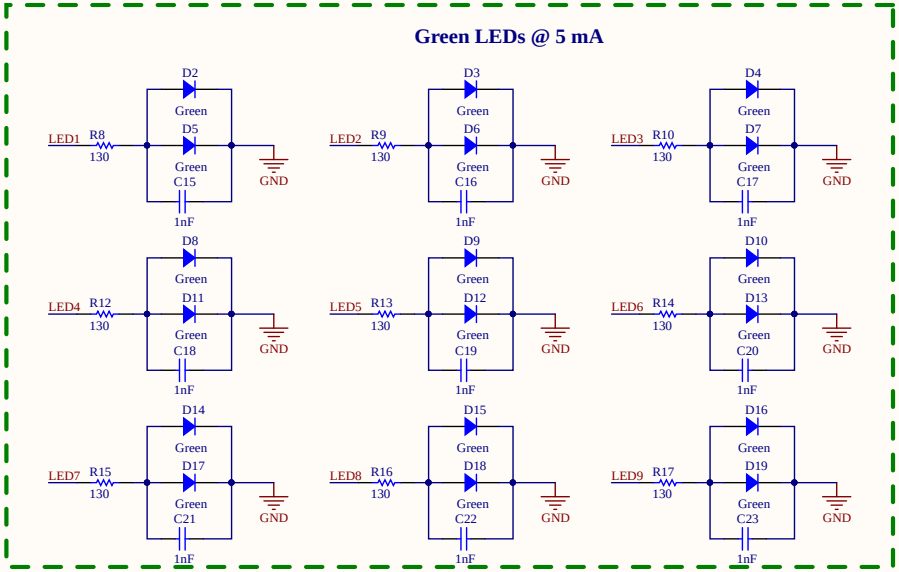

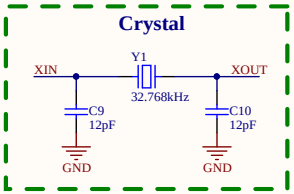

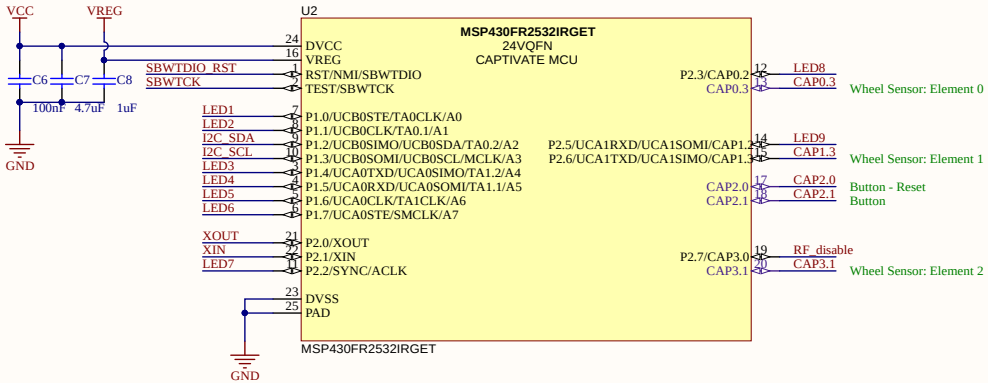

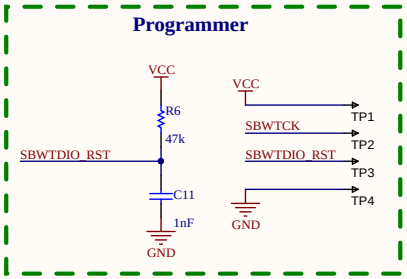

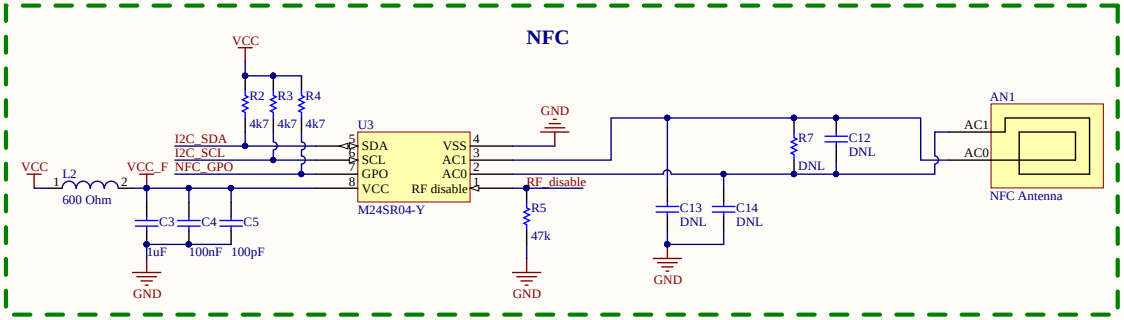

Title		
Size A3	Number	Revision
Date: 16/10/2016		Sheet of
File: C:\Users\..\Main.SchDoc		Drawn By:

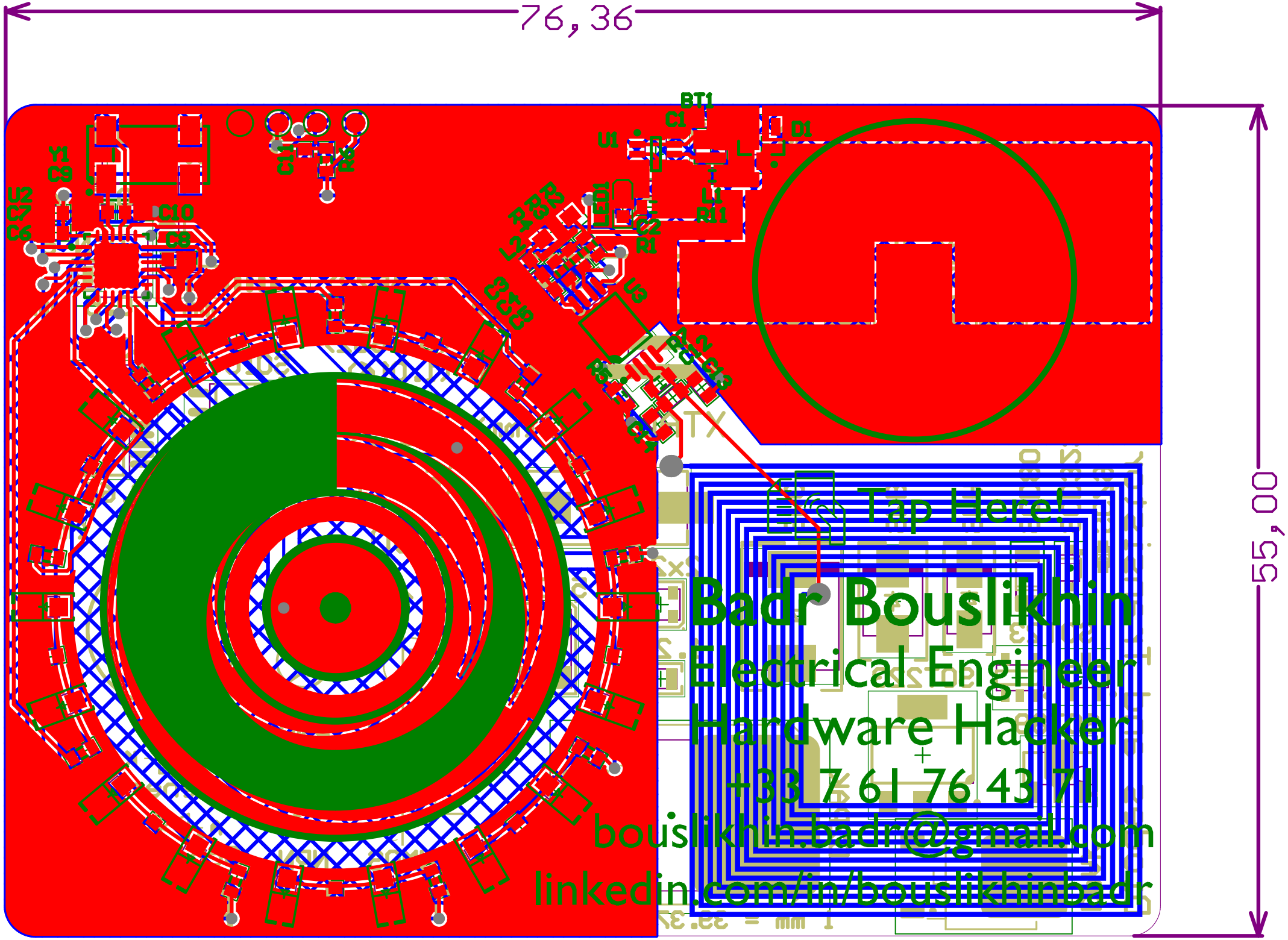
76,36
55,00
BT1
C1
U1
D1
L
R11
Y1
C9
C11
R4
U2
C7
C6
C10
C8
R8
R9
L2
C5
U3
R5
C2
R1
C3
C4
TX
Tap Here!
Badr Bouslikhin
Electrical Engineer
Hardware Hacker
+33 7 61 76 43 71
bouslikhin.badr@gmail.com
linkedin.com/in/bouslikhinbadr

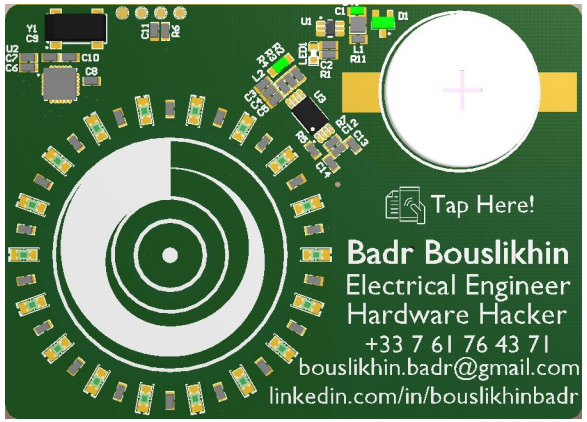
Tap Here!
Badr Bouslikhin
Electrical Engineer
Hardware Hacker
+33 7 61 76 43 71
bouslikhin.badr@gmail.com
linkedin.com/in/bouslikhinbadr

Diodes and Transistors
SMD R/C/L
Imperial (Metric)
0201 (0603)
0402 (1005)
0603 (1608)
0805 (2012)
1206 (3216)
1210 (3225)
2010 (5025)
SC79
SOD323
SOD80
SMA
SMB
SMC
SOT23
SOT89
SOT223
DPAK
TO-252-3
D2PAK
TO-263
Trace Width mil (mm)
6 (0.1524)
8 (0.2032)
10 (0.254)
12 (0.3048)
18 (0.4572)
24 (0.6096)
38 (0.9652)
40 (1.016)
XTAL/OSC (mm)
HC49
2x2.5
5x3.2
1.2x2
Font Size
100
80
60
40 mil
1 in = 39.37 mile
QFP 32
0.8 mm
QFN 12
0.5 mm
QFN 6
0.5 mm
SOIC 8
1.27 mm
SSOP 20
0.65 mm
TH Cap Dia. (mm)
10
PMOS
PNP
NMOS
NPN
Zener
Schottky
Can I help you?