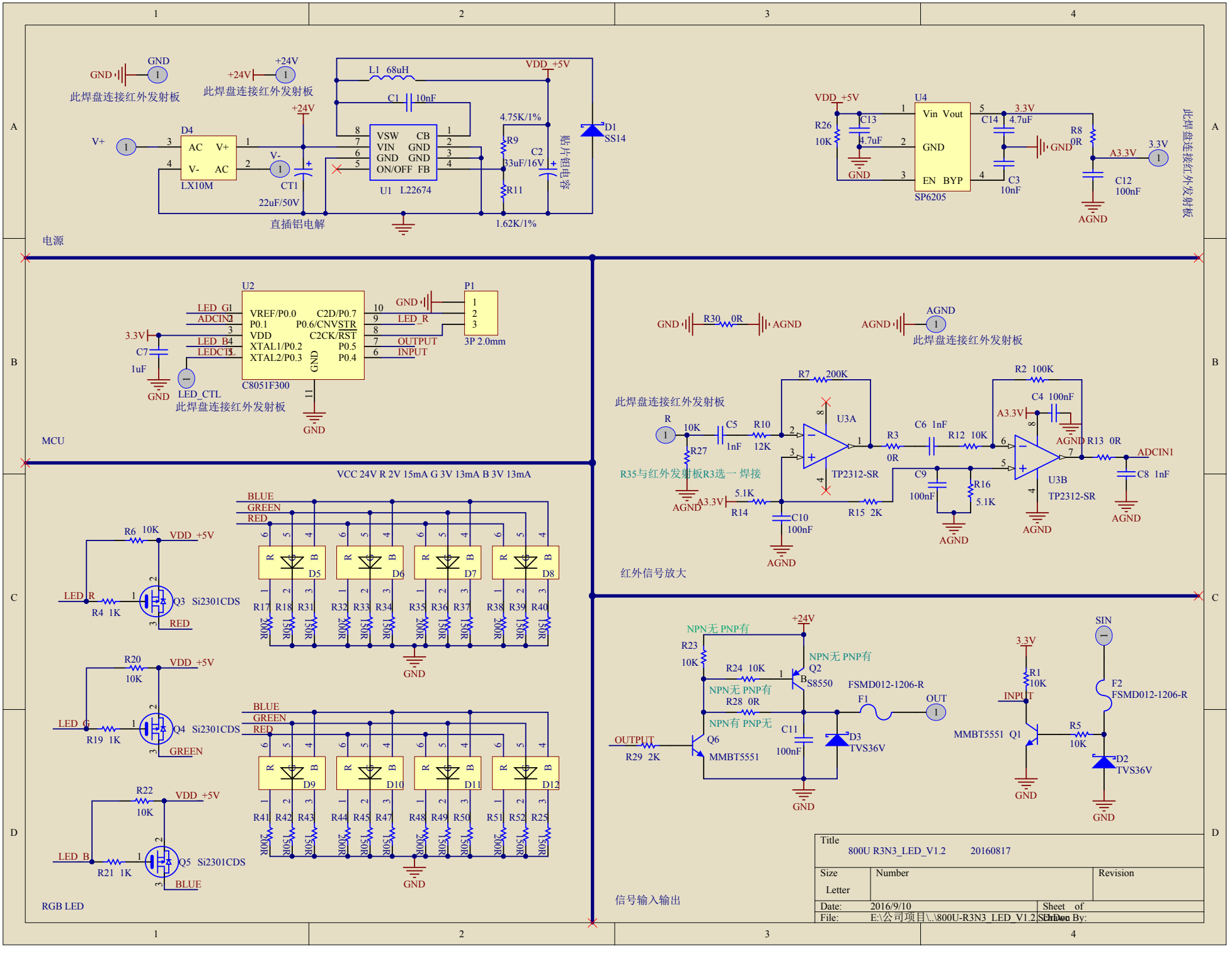
电源
GND
此焊盘连接红外发射板
+24V
此焊盘连接红外发射板
V+
D4
AC V+
V- AC
LX10M
V-
CT1
22uF/50V
直插铝电解
L1 68uH
VDD +5V
C1 10nF
VSW CB
VIN GND
GND GND
ON/OFF FB
U1 L22674
4.75K/1%
R9
C2
33uF/16V
R11
1.62K/1%
贴片铝电容
D1
SS14
VDD +5V
R26
10K
C13
4.7uF
U4
Vin Vout
GND
EN BYP
SP6205
3.3V
C14 4.7uF
R8
0R
A3.3V
C3
10nF
C12
100nF
AGND
此焊盘连接红外发射板
MCU
U2
VREF/P0.0 C2D/P0.7
P0.1 P0.6/CNVSTR
VDD C2CK/RST
XTAL1/P0.2 P0.5
XTAL2/P0.3 P0.4
GND
C8051F300
LED_G
ADCIN2
LED_B
LEDCTL
LED_R
OUTPUT
INPUT
P1
3P 2.0mm
3.3V
C7
1uF
LED_CTL
此焊盘连接红外发射板
VCC 24V R 2V 15mA G 3V 13mA B 3V 13mA
BLUE
GREEN
RED
R6 10K
VDD +5V
LED_R
R4 1K
Q3 Si2301CDS
D5
D6
D7
D8
R17 R18 R31 R32 R33 R34 R35 R36 R37 R38 R39 R40
200R 150R
R20
10K
LED_G
R19 1K
Q4 Si2301CDS
D9
D10
D11
D12
R41 R42 R43 R44 R45 R47 R48 R49 R50 R51 R52 R25
R22
LED_B
R21 1K
Q5 Si2301CDS
RGB LED
R30 0R
AGND
此焊盘连接红外发射板
R
10K
C5
1nF
R10
12K
R27
R35与红外发射板R3选一焊接
R7 200K
U3A
TP2312-SR
R3
0R
C6 1nF
R12 10K
R2 100K
C4 100nF
R13 0R
ADCIN1
C8 1nF
U3B
TP2312-SR
C9
100nF
R16
5.1K
5.1K
R14
C10
100nF
R15 2K
红外信号放大
NPN无 PNP有
R23
10K
R24 10K
Q2
S8550
R28 0R
NPN有 PNP无
Q6
MMBT5551
OUTPUT
R29 2K
C11
100nF
FSMD012-1206-R
F1
OUT
D3
TVS36V
SIN
R1
10K
INPUT
MMBT5551 Q1
R5
10K
F2
FSMD012-1206-R
D2
TVS36V
信号输入输出
Title
800U R3N3_LED_V1.2 20160817
Size
Letter
Number
Revision
Date: 2016/9/10
Sheet of
File: E:\公司项目\..\800U-R3N3_LED_V1.2.SchDoc
Drawn By: